OPREMA d.d.

Rezervni dijelovi i pribor za spajanje
Spare parts and accessories

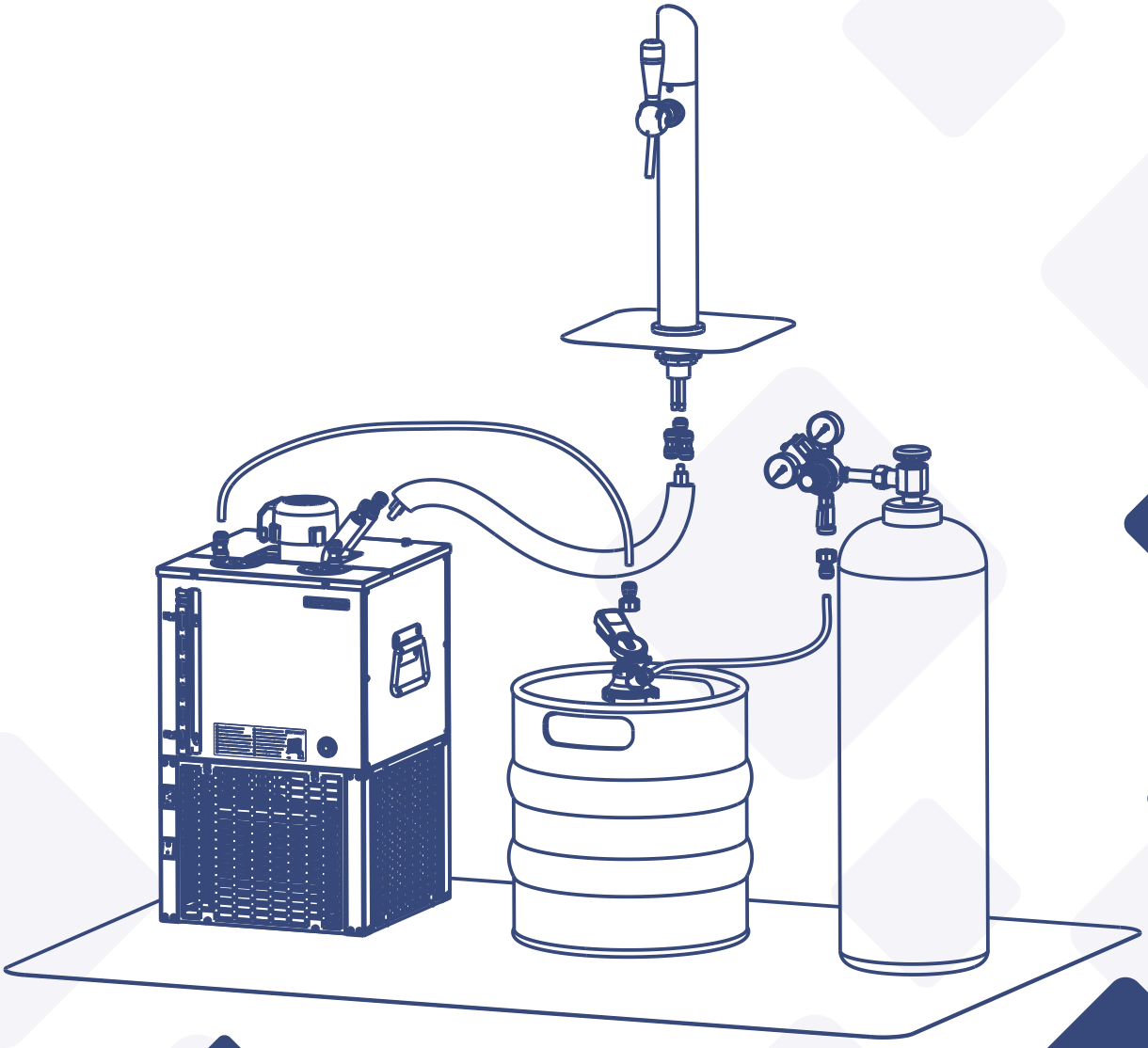

Copyright © 2019. Oprema d.d.

Rezervni dijelovi važan su dio našeg proizvodnog programa, a njima korisnik može riješiti problem ili ponekad unaprijediti korištenje naših rashladnih uređaja za pivo, vino, sokove ili druge ugostiteljske uređaje.
Širok asortiman dijelova najkvalitetnijih europskih dobavljača, za montažu, popravak i servis aparata za hlađenje i istakanje pića.

Spare parts are also a important parts of our production program. With them users can solve problems or enhance our beer, wine, juice and other cooling units.

A wide range of parts from top quality European suppliers for the installation, repair and service of cooling and dispensing units.

Dijelovi uređaja / Parts of the unit

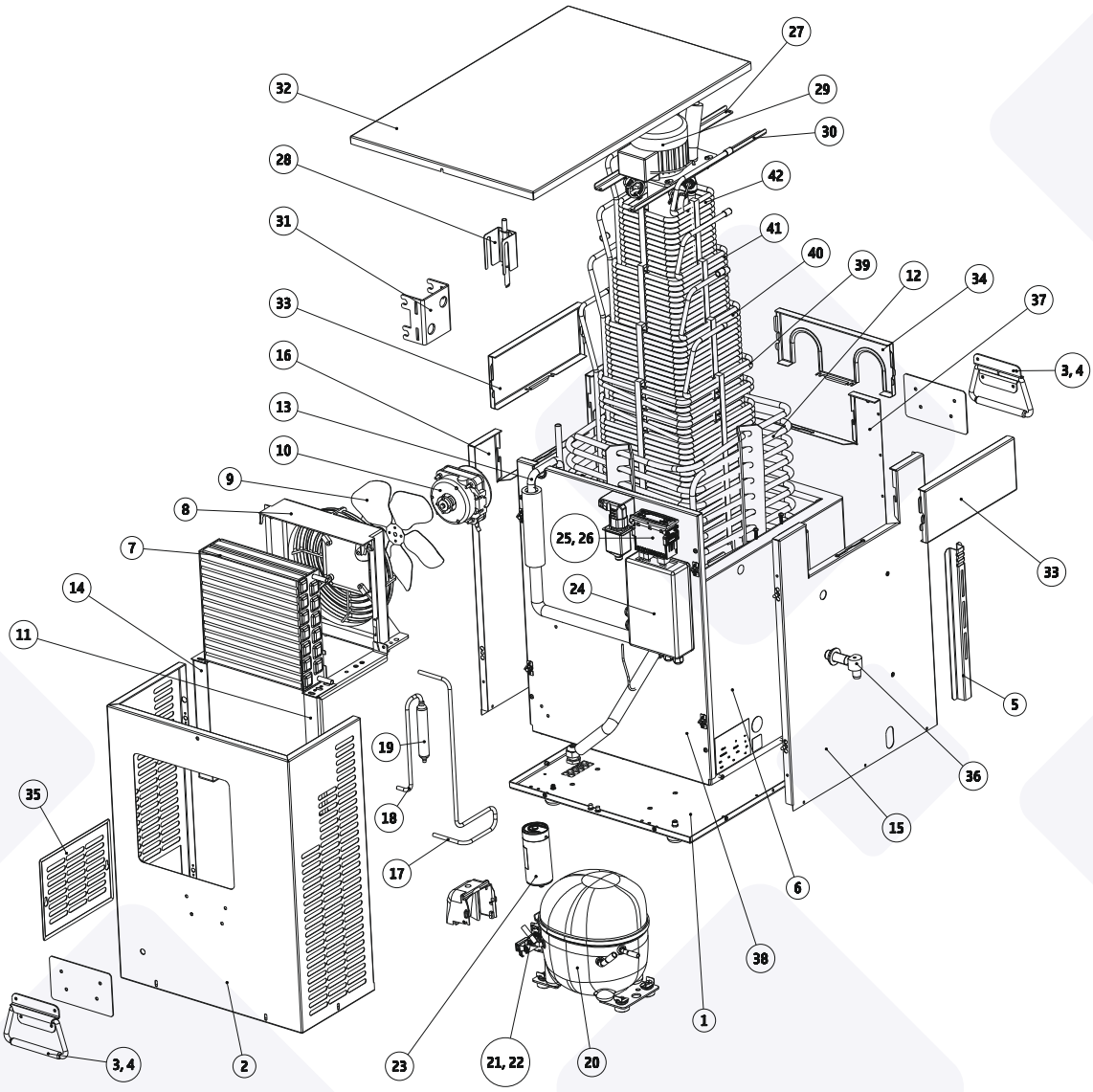

Kompresor, termostat, ventilator, pumpa ...
Compressor, Thermostat, Fan, Pump ...

OPREMA d.d.

Prikazi spajanja podpultnih i nadpultnih aparata, u varijantama sa ili bez zračnog kompresora te potiskivanje pića plinom ili pumpama.

Displays of connecting undercounter and overcounter cooling units, in variants with or without an air compressor, and suppression of drinks with gas or pumps.

Pribor za priključenje / Accessories

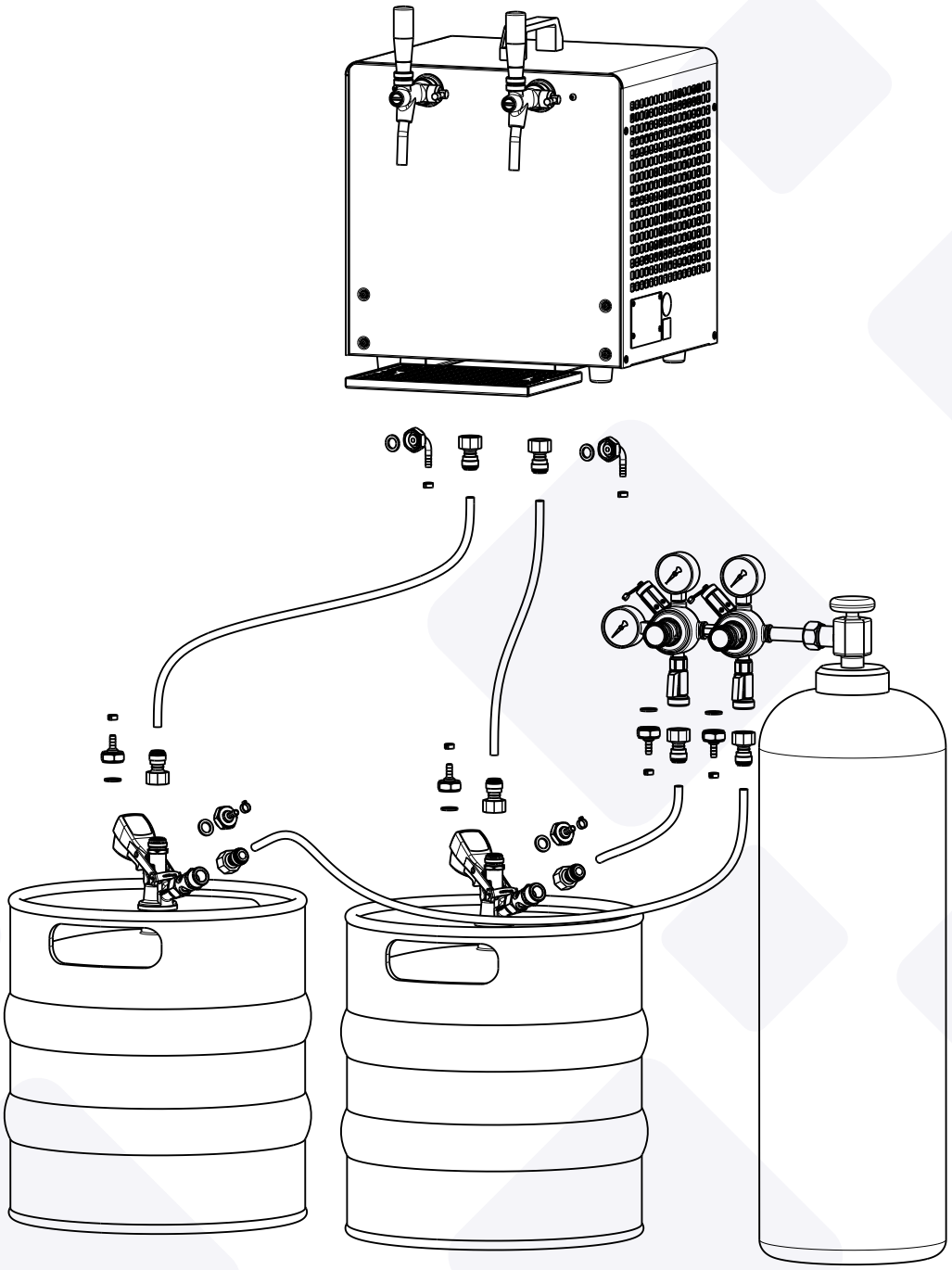

Reduktori pritiska , glave za bačve, spojnice, crijeva ...
Reducers, Dispensing heads, Connectors, Tubes ...

OPREMA d.d.

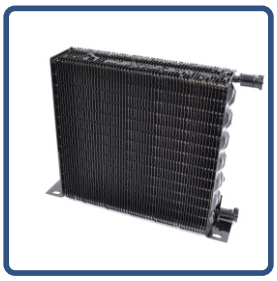

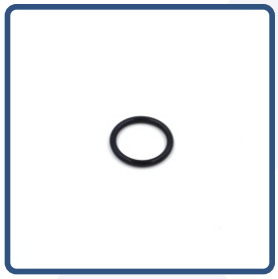

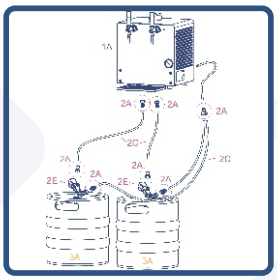
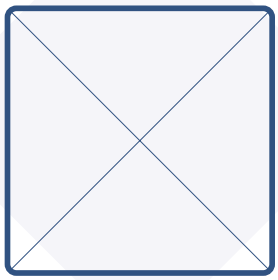

www.oprema.com

OPREMA d.d.

320045

Code

320045

Reduktor pritiska CO2 1LTG
4 bara- izlaz 1/4"
Reducer CO2 1LTG 4 bar - outlet 1/4"

320092

Code

320092

Reduktor pritiska CO2 1 LTG
4 bara- izlaz 1/4" spojnica JG 3/8"
Reducer CO2 1 LTG 4 bar - outlet 1/4"
ball valve with JG - connector 3/8"

702073

Code

702073

Reduktor pritiska CO2 1 LTG 4 bara- izlaz 1/4"
kuglasti ventil sa nazuvicom 7
Reducer CO2 1LTG 4 bar - outlet 1/4"
ball valve with nipple 7

320098

Code

320098

Reduktor pritiska CO2 1LTG 4 bara G5/8" BS
- izlaz 1/4", kuglasti ventil sa JG 3/8"
Reducer CO2 4 1LTG bar G5/8" BS outlet 1/4"
ball valve with JG connector 3/8"

320047

Code

320047

Reduktor pritiska N2 1LT 4 bara- izlaz 1/4"
Reducer N2 1LTG 4 bar - outlet 1/4"

320089

Code

320089

Reduktor pritiska N2 1LTG 4 bara- izlaz 1/4"
spojnica JG 3/8"
Reducer N2 1LTG 4 bar - outlet 1/4"
ball valve with JG - connector 3/8"

702077

Code

702077

Reduktor pritiska N2 1LTG 4 bara- izlaz 1/4"
kuglasti ventil sa nazuvicom 7
Reducer N2 1LTG 4 bar - outlet 1/4"
ball valve with nipple 7

320013

Code

320013

Reduktor pritiska CO2 1LTG 4 bara- izlaz 1/4"
Reducer CO2 1LTG 4 bar - outlet 1/4"

702072

Code

702072

Reduktor pritiska CO2 1LTG 4 bara- 2 izlaza 1/4" kuglasti ventili sa spojnicama JG 3/8"
Reducer CO2 1LTG 4 bar - 2 outlet 1/4" ball valves with JG - connectors 3/8"

702071

Code

702071

Reduktor pritiska CO2 1LTG 4 bara- 2 izlaza 1/4" kuglasti ventili sa nazuvicom 7
Reducer CO2 1LTG 4 bar - 2 outlets 1/4" ball valves with nipple 7

702080

Code

702080

Reduktor pritiska CO2 1LTG 4 bara- 3 izlaza 1/4" kuglasti ventili sa spojnicama JG 3/8"
Reducer CO2 1LTG 4 bar - 3 outlet 1/4" ball valves with JG - connectors 3/8"

302046

Code

302046

Reduktor pritiska CO2 2LTG 4 bara - 2 izlaza 1/4"
Reducer CO2 2LTG 4 bar - 2 outlet 1/4"

320094

Code

320094

Reduktor pritiska CO2 2LTG 4 bara
2 izlaza 1/4" kuglasti ventili sa spojnicama JG 3/8"
Reducer CO2 2LTG 4 bar - 2 outlet 1/4"
ball valves with JG - connectors 3/8"

320091

Code

320091

Reduktor pritiska 2LTG N2 4 bara dupli-
2 izlaza 1/4" kuglasti ventili sa spojnicama JG 3/8"
Reducer N2 2LTG 4 bar double - 2 outlet 1/4"
ball valves with JG - connectors 3/8"

320048

Code

320048

Reduktor pritiska CO2 5 LTG 4 bara - 5 izlaza 1/4"
kuglasti ventili sa spojnicama JG 3/8"
Reducer CO2 5 LTG 4 bar - 5 outlet 1/4"
ball valves with JG - connectors 3/8"

320090

Code

320090

Reduktor pritiska CO2 1LTG 7 bara-
izlaz 1/4" spojnica JG 3/8"
Reducer CO2 1LTG 7 bar - outlet 1/4"
ball valve with JG - connector 3/8"

320033

Code

320033

Reduktor pritiska CO2 1LTG 7 bara- izlaz 1/4"
Reducer CO2 1LTG 7 bar - outlet 1/4"

320027

Code

320027

Reduktor pritiska CO2 2LTG 7 bara- 2 izlaza 1/4" sa kuglastim ventilima
Reducer CO2 2LTG 7 bar - 2 outlet 1/4" with ball valves

321028

Code

321028

Manometar 0-10 bara - 1/4"
Pressure gauge 0-10 bar - 1/4"

321034

Code

321034

Manometar 0-25 bara - 1/4"
Pressure gauge 0-25 bar - 1/4"

OPREMA d.d.

321011

Code

321011

Manometar 0-250 bara - 1/4"
Pressure gauge 0-250 bar - 1/4"

328101

Code

328101

Račva dvostruka - 1/4"
2-way diffuser 1/4"

328227

Code

328227

Račva trostruka - 1/4"
3-way diffuser 1/4"

328241

Code

328241

Račva dvostruka - 1/4"
sa kuglastim ventilima i nazuvicom 7
2-way diffuser 1/4"
ball valves with nipple 7

328583

Code

328583

Račva dvostruka - 1/4"
sa kuglastim ventilima i spojnicama JG 3/8"
2-way diffuser - 1/4"
ball valves with JG connector 3/8"

328584

Code

328584

Račva trostruka - 1/4"
sa kuglastim ventilima i spojnicama JG 3/8"
3-way diffuser - 1/4"
ball valves with JG connector 3/8"

328228

Code

328228

Račva trostruka - 1/4"
sa kuglastim ventilima i nazuvicama 7
3-way diffuser - 1/4"
ball valves with nipple 7

322003

Code

322003

Glava za bačvu - tip S (ulazi 5/8")
Dispense head - type S (inlet 5/8")

322004

Code

322004

Glava za bačvu - tip G (ulazi 5/8")
Dispense head - type G (inlet 5/8")

322012

Code

322012

Glava za bačvu - tip M (ulazi 5/8")
Dispense head - type M (inlet 5/8")

322013

Code

322013

Glava za bačvu - tip A (ulazi 5/8")
Dispense head - type A (inlet 5/8")

322193

Code
322193

Glava za bačvu - tip U (ulazi 5/8")
Dispense head - type U (inlet 5/8")

322196

Code
322196

Igla za bačvu - tip D (311 mm)
Spear for EURO keg type D (311 mm)

322197

Code
322197

Igla za bačvu - tip D (476 mm)
Spear for EURO keg type D (476 mm)

322198

Code
322198

Igla za bačvu - tip U (309 mm)
Spear for EURO keg type U (309 mm)

322199

Code

322199

Igla za bačvu - tip U (474 mm)
Spear for EURO keg type U (474 mm)

322200

Code

322200

Igla za bačvu - tip S (311 mm)
Spear for EURO keg type S (311 mm)

322201

Code

322201

Igla za bačvu - tip S (476 mm)
Spear for EURO keg type S (476 mm)

322202

Code

322202

Igla za bačvu - tip M (317 mm)
Spear for EURO keg type M (317 mm)

322203

Code

322203

Igla za bačvu - tip M (482 mm)
Spear for EURO keg type M (482 mm)

322204

Code

322204

Igla za bačvu - tip G (323 mm)
Spear for EURO keg type G (323 mm)

322205

Code

322205

Igla za bačvu - tip G (488 mm)
Spear for EURO keg type G (488 mm)

322206

Code

322206

Igla za bačvu - tip A (323 mm)
Spear for EURO keg type A (323 mm)

322207

Code

322207

Igla za bačvu - tip A (488 mm)
Spear for EURO keg type A (488 mm)

322071

Code

322071

Igla za bačvu - tip S (275 mm)
Spear for EURO keg type S (275 mm)

322070

Code

322070

Igla za bačvu - tip G (287 mm)
Spear for EURO keg type G (287 mm)

323088

Code
322088

Slavina za pivo - 5/8" (35 mm)
Dispense taps 5/8" (35 mm)

323082

Code
323082

Slavina za pivo - 5/8" (55 mm)
Dispense taps 5/8" (55 mm)

323041

Code
323041

Slavina za pivo zlatna- 5/8" (35 mm)
Dispense taps gold plated - 5/8" (35 mm)

323077

Code
323077

Slavina za pivo - 1/2" (13 mm)
Dispense taps 1/2" (13 mm)

323102

Code
323102

Slavina stout - 1/2"
Dispense taps stout 1/2"

325032

Code
325032

Slavina za vino
Dispense taps for wine

324016

Code
324016

Slavina Flomatic
Dispense taps Flomatic

323062

Code
323062

Ključ slavine
Beer tap key

359220

Code

359220

Termostat elektronski EWPlus 961

Digital thermostat EWPlus 961

344014

Code

344014

Termostat K50-L5803000

Thermostat K50-L5803000

344017

Code

344017

Termostat K50-L3449000

Thermostat K50-L3449000

344033

Code

344033

Termostat K50-H2005006

Thermostat K50-L2005006

344006

Code

344006

Termostat K50-L3447000

Thermostat K50-L3447000

344008

Code

344008

Termostat K50-H1122000

Thermostat K50-H1122000

344019

Code

344019

Termostat K22-L2084000

Thermostat K22-L2084000

356162

Code

356162

Sonda termostata

Thermostat probe

300016

Code

300016

Kompresor TL 5 G - R134a - 5,08 ccm

Compressor TL 5 G - R134a - 5,08 ccm

300005

Code

300005

Kompresor FR 8,5 G - R134a - 7,95 ccm

Compressor FR 8,5 G - R134a - 7,95 ccm

300019

Code

300019

Kompresor FR 11 G - R134a - 11,15 ccm

Compressor FR 11 G - R134a - 11,15 ccm

300092

Code

300092

Kompresor NL 11 MF - R134a - 11,15 ccm

Compressor NL 11 MF - R134a - 11,15 ccm

300010

Code

300010

Kompresor SC 12 G - R134a - 12,87 ccm

Compressor SC 12 G - R134a - 12,87 ccm

300012

Code

300012

Kompresor SC 15 G - R134a - 15,28 ccm

Compressor SC 15 G - R134a - 15,28 ccm

300013

Code

300013

Kompresor SC 18 G - R134a - 17,69 ccm

Compressor SC 18 G - R134a - 17,69 ccm

300014

Code

300014

Kompresor SC 21 G - R134a - 20,95 ccm

Compressor SC 21 G - R134a - 20,95 ccm

300097

Code

300097

Kompresor NEK 6210Z - R134a - 12,11 ccm

Compressor NEK 6210Z - R134a - 12,11 ccm

300098

Code

300098

Kompresor NEK 6212Z - R134a - 14,28 ccm

Compressor NEK 6212Z - R134a - 14,28 ccm

300103

Code

300103

Kompresor NEK 6214Z - R134a - 16,80 ccm

Compressor NEK 6214Z - R134a - 16,80 ccm

300082

Code

300082

Kompresor NL 7 CNX - R290 - 7,27 ccm

Compressor NL 7 CNX - R290 - 7,27 ccm

300113

Code

300113

Kompresor EMT 6152U - R290 - 5,19 ccm

Compressor EMT 6152U - R290 - 5,19 ccm

300156

Code

300156

Kompresor EMT 6165U - R290- 5,96 ccm

Compressor EMT 6165U - R290 - 5,96 ccm

300120

Code

300120

Kompresor NEU 6210U - R290 - 8,77 ccm

Compressor NEU 6210U - R290 - 8,77 ccm

300101

Code

300101

Kompresor NEK 6213U - R290 - 12,11 ccm

Compressor NEK 6213U - R290 - 12,11 ccm

352001

Code

352001

Startni kondenzator 60 MF - 117U5014
Starting Capacitor 60 MF - 117U5014

352064

Code

352064

Startni kondenzator 80 MF - 117U5017
Starting Capacitor 80 MF - 117U5017

352017

Code

352017

Startni kondenzator 80 MF - 117U5015
Starting Capacitor 80 MF - 117U5015

352097

Code

352097

Startni kondenzator 120 MF - 117U5018
Starting Capacitor 120 MF - 117U5018

OPREMA d.d.

304024

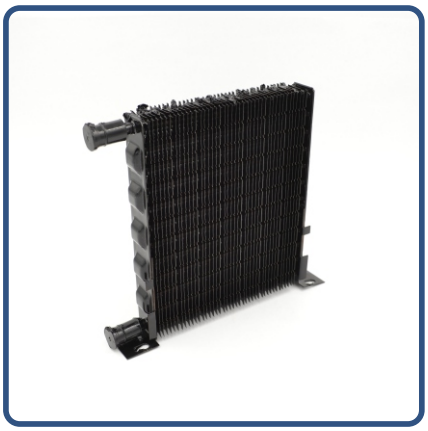

Code
304024

Kondenzator STFT 12 1 150
Condenser STFT 12 1 150

304015

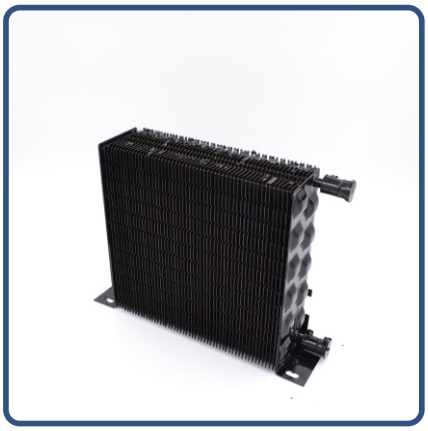

Code
304015

Kondenzator STFT 12 2 180
Condenser STFT 12 2 180

304016

Code
304016

Kondenzator STFT 14 2 215
Condenser STFT 14 2 215

304017

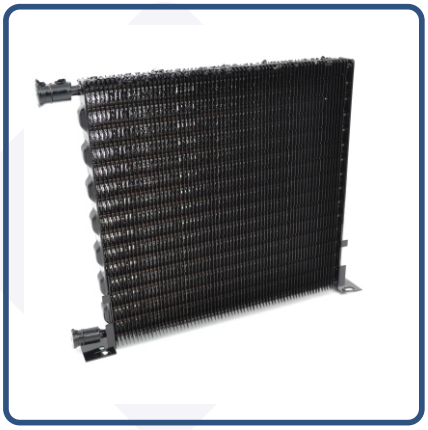

Code
304017

Kondenzator STFT 16 1 24
Condenser STFT 16 1 24

304040

Code
304040

Kondenzator STFT 16 2 24
Condenser STFT 16 2 24

304007

Code
304007

Kondenzator STFT 18 2 27
Condenser STFT 18 2 27

304096

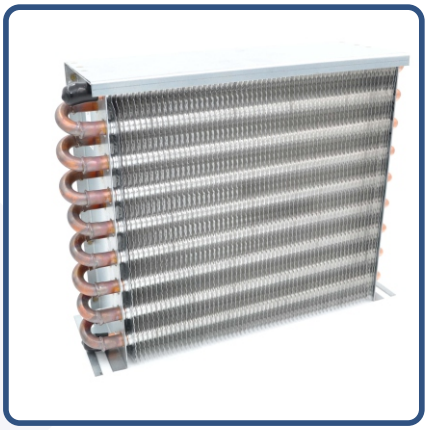

Code
304096

Kondenzator 4S 9x2
Condenser 4S 9x2

343124

Code
343124

Elisa 172-28-5P
Fan blade 172-28-5P

343063

Code

343063

Elektromotor 5W - 1300 o/min
Electromotor 5W - 1300 rpm

343066

Code

343066

Elektromotor 10W - 1300 o/min
Electromotor 10W - 1300 rpm

342014

Code

342014

Motor mješač M4S068-BF08-38
Motor agitator M4S068-BF08-38

342007

Code

342007

Motor mješač M2E068-CF10-43
Motor agitator M2E068-CF10-43

342024

Code

342024

Motor mješač KM4330/2-244-ADC
Motor agitator KM4330/2-244-ADC

342004

Code

342004

Motor mješač sa pumpom
P2E076-AC06-15
Motor agitator with pump
P2E076-AC06-15

342019

Code

342019

Motor mješač sa duplom pumpom
P2E076-AC06-25
Motor agitator with pump
P2E076-AC06-25

341127

Code

341127

Pumpa SPC 51 - 15,8 l/min - 6 m

Pump SPC 51 - 15,8 l/min - 6 m

341100

Code

341100

Pumpa SPC 53 - 17 l/min - 24 m

Pump SPC 53 - - 17 l/min - 24 m

341104

Code

341104

Pumpa SPC 54 - 17 l/min - 24 m

Pump SPC 54- 17 l/min - 24 m

341111

Code

341111

Pumpa STR-7 - 12 l/min - 7,5 m

Pump STR-7 - 12 l/min - 7,5 m

341178

Code

341178

Pumpa STB12 - 13 l/min 12m
Pump STB12 - 13 l/min 12m

341134

Code

341134

Pumpa MID7 - 9,7 l/min 6,3m
Pump MID7 - 9,7 l/min 6,3m

341117

Code

341117

Pumpa MIR-C - 3,7 l/min 5,5m
Pump MIR-C - 3,7 l/min 5,5m

341085

Code

341085

Pumpa BIR/P - 13 l/min 7,9m
Montažna ploča Celli
Pump BIR/P - 13 l/min 7,9m
Celli flange

341091

Code

341091

Pumpa BIR/P - 13 l/min 7,6m
Montažna ploča Totton
Pump BIR/P 13 l/min 7,6m
Totton flange

341093

Code

341093

Pumpa BIR 8 - 15 l/min 8m
Montažna ploča Celli
Pump BIR 8 - 15 l/min 8m
Celli flange

341004

Code

341004

Pumpa za vodu (490 l/h)-1m
Water pump (490 l/h)-1m

341026

Code

341026

Pumpa za vodu (550 l/h)-1m
Water pump (550 l/h)-1m

341038

Code

341038

Pumpa za vodu 6,9 bara
Carbonator pump 6,9 bars

341180

Code

341180

Pumpa Bag in Box Flojet BEVJET II
Pump Bag in Box Flojet BEVJET II

341042

Code

341042

Pumpa CO2 za Bag in Box Flojet
Pump CO2 for Bag in Box Flojet

341046

Code

341046

Pumpa za vino Shurflo
Wine pump Shurflo

341071

Code

341071

Pumpa za vino Shurflo sa tajmerom
3,1 bar 6 l/min
Wine pump Shurflo with timer
3,1 bar 6 l/min

341036

Code

341036

Pumpa PROCON 131A 100F
300 l/h - max 16 bara
PROCON Pump 131A 100F
300 l/h - max 16 bar

341009

Code

341009

Pumpa PROCON 132A 035F
100 l/h - max 16 bara
PROCON Pump 132A 035F
100 l/h - max 16 bara

341073

Code

341073

Pumpa PROCON 133C 100F
300 l/h - max 16 bara
PROCON Pump 133C 100F
300 l/h - max 16 bara

310072

Code

310072

Cijev piton 1+2
(1 pivo 12/7 + 2 recirkulacije 11/7)
Python 1+2
(1 Beer 12/7 + 2 Recirculations 11/7)

310056

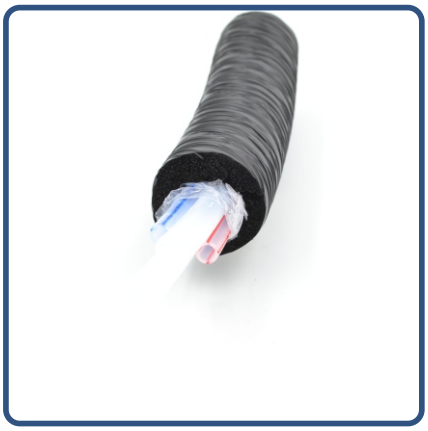

Code

310056

Cijev piton 2+2
(2 piva 9,5/6,7 + 2 recirkulacije 12,7/9,5)
Python 2+2
(2 Beers 9,5/6,7 + 2 Recirculations 12,7/9,5)

310052

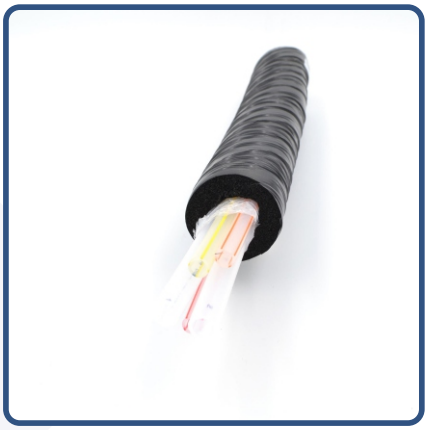

Code

310052

Cijev piton 3+2
(3 piva 9,5/6,7 + 2 recirkulacije 12,7/9,5)
Python 3+2
(3 Beers 9,5/6,7 + 2 Recirculations 12,7/9,5)

310053

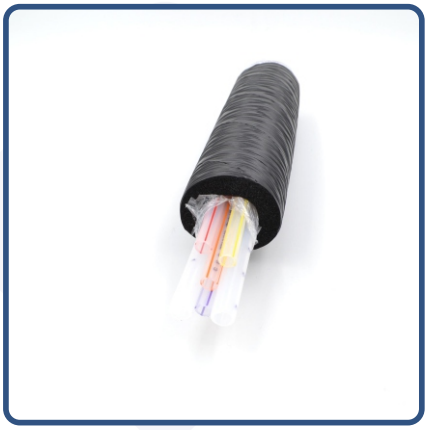

Code

310053

Cijev piton 4+2
(4 piva 9,5/6,7 + 2 recirkulacije 12,7/9,5)
Python 4+2
(4 Beers 9,5/6,7 + 2 Recirculations 12,7/9,5)

310095

Code

310095

Cijev piton 6+2
(6 piva 9,5/6,7 + 2 recirkulacije 12,7/9,5)
Python 6+2
(6 Beers 9,5/6,7 + 2 Recirculations 12,7/9,5)

310089

Code

310089

Cijev piton 8+2
(8 piva 9,5/6,7 + 2 recirkulacije 12,7/9,5)
Python 6+2
(8 Beers 9,5/6,7 + 2 Recirculations 12,7/9,5)

310111

Code

310111

Cijev piton 10+2
(10 piva 9,5/6,7 + 2 recirkulacije 12,7/9,5)
Python 6+2
(10 Beers 9,5/6,7 + 2 Recirculations 12,7/9,5)

310055

Code

310055

Crijevo Fi 6/4 mm PE
Tube Fi 6/4 mm PE

310012

Code

310012

Crijevo Fi 8/4 mm FLEXLAYER
Tube Fi 8/4 mm FLEXLAYER

310016

Code

310016

Crijevo Fi 9,5/6,7 mm POLY MD PE
Tube Fi 9,5/6,7 mm POLY MD PE

310003

Code

310003

Crijevo Fi 12/7 mm FLEXLAYER
Tube Fi 12/7 mm FLEXLAYER

310026

Code

310026

Crijevo Fi 12,7/8 mm BREWMASTER 2
Tube Fi 12,7/8 mm BREWMASTER **2**

310058

Code

310058

Crijevo Fi 12,7/9,5 mm POLY
(Za JG spojnice 1/2")
Tube Fi 12,7/9,5 mm POLY
(For JG connectors 1/2")

310033

Code

310033

Crijevo silikonsko Fi 14/8 mm
Silicone Tube Fi 14/8 mm

310005

Code

310005

Crijevo Fi 15/10 mm FLEXLAYER
Tube Fi 15/10 mm FLEXLAYER

328544

Code

328544

Spojnica ravna DM 3/8"
Straight connector DM 3/8"

328525

Code

328525

Spojnica adapter DM 3/4"-3/8"
Straight connector DM 3/4" 3/8"

328014

Code

328014

Spojnica ravna JG 5/16" - 3/8"
Straight connector JG 5/16" - 3/8"

328203

Code

328203

Spojnica ravna JG 5/16" - 3/8"
Straight connector JG 5/16" - 3/8"

328013

Code

328013

Spojnica ravna JG 3/8" - 3/8"
Straight connector JG 3/8" - 3/8"

328325

Code

328325

Spojnica ravna JG 3/8" - 3/8"
Straight connector JG 3/8" - 3/8"

328108

Code

328108

Spojnica ravna JG 1/2" - 1/2"
Straight connector JG 1/2" - 1/2"

328036

Code

328036

Spojnica ravna JG 1/2" - 3/8"
Straight connector JG 1/2" - 3/8"

328431

Code
328431

Spojnica ravna JG 5/16" - 1/2"
Straight connector JG 5/16" - 1/2"

328230

Code
328230

Spojnica ravna JG 1/2" - 5/16"
Straight connector JG 1/2" - 5/16"

328106

Code
328106

Spojnica ravna adapter JG 3/8" - 1/4"
Straight connector adapter JG 3/8" - 1/4"

328109

Code
328109

Spojnica ravna adapter JG 1/2" - 5/8"
Straight connector JG 1/2" - 5/8"

328159

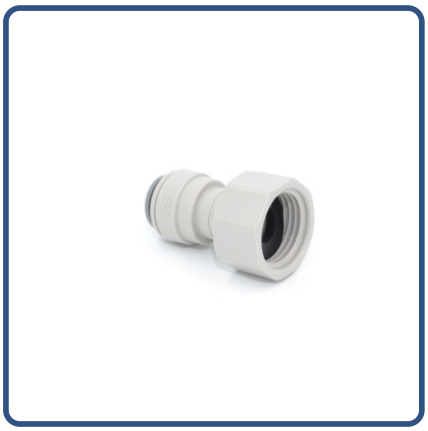

Code

328159

Spojnica ravna adapter JG 3/8" - 1/2"
Straight connector adaptor JG 3/8" - 1/2"

328295

Code

328295

Spojnica ravna adapter JG 3/8" - 1/2"UNS
Straight connector JG 3/8" - 1/2" UNS

328017

Code

328017

Spojnica ravna adapter JG 3/8" - 5/8"
Straight connector adaptor JG 3/8" - 5/8"

328154

Code

328154

Spojnica ravna adapter JG 3/8" - 3/8"
Straight connector adaptor JG 3/8" - 3/8"

328322

Code

328322

Spojnica JG Trn 1/4" - 5/16"

Connector Tube to Hose JG 1/4" - 5/16"

328289

Code

328289

Spojnica JG Trn 5/16" - 3/8"

Connector Tube to Hose JG 5/16" - 3/8"

328292

Code

328292

Spojnica JG Trn 3/8" - 5/16"

Connector Tube to Hose JG 3/8" - 5/16"

328133

Code

328133

Spojnica JG 3/8" - 5/16"

Connector JG 3/8" - 5/16"

328123

Code

328123

Spojnica adapter JG 1/2" - 3/8"
Connector adaptor JG 1/2" - 3/8"

328110

Code

328110

Spojnica JG koljeno 3/8" - 3/8"
Connector JG elbow 3/8" - 3/8"

328158

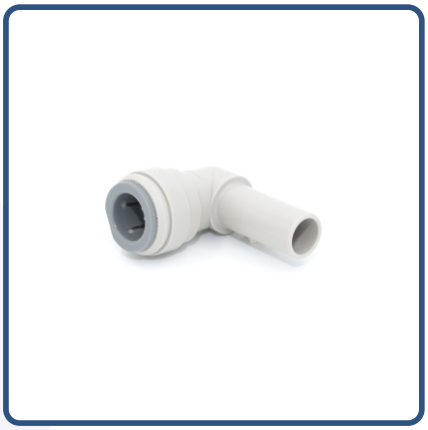

Code

328158

Spojnica JG koljeno 1/2" - 1/2"
Connector JG elbow 1/2" - 1/2"

328143

Code

328143

Spojnica JG koljeno 15mm - 15mm
Connector JG elbow 15mm - 15mm

328122

Code
328122

Spojnica JG koljeno 5/16" - 5/16"
Connector JG elbow 5/16" - 5/16"

328234

Code
328234

Spojnica JG koljeno 3/8" - 3/8"
Connector JG elbow 3/8" - 3/8"

328049

Code
328049

Spojnica JG koljeno 1/2" - 1/2"
Connector JG elbow 1/2" - 1/2"

328243

Code
328243

Spojnica JG koljeno 1/2" - 5/16"
Connector JG elbow 1/2" - 5/16"

328016

Code
328016

Spojnica JG koljeno 1/2" - 3/8"
Connector JG elbow 1/2" - 3/8"

328207

Code
328207

Spojnica JG T 5/16"
Connector JG T 5/16"

328242

Code
328242

Spojnica JG T 3/8"
Connector JG T 3/8"

328240

Code
328240

Spojnica JG T 1/2"
Connector JG T 1/2"

328107

Code

328107

Spojnica JG Y 3/8"
Connector JG Y 3/8"

328038

Code

328038

Spojnica adapter JG 3/8" - 1/4" BSPT
Connector adaptor JG 3/8" - 1/4" BSPT

328217

Code

328217

Prsten osigurač JG 3/8"
Locking clip JG 3/8"

328283

Code

328283

Prsten osigurač JG 1/2"
Locking clip JG 1/2"

328081

Code
328081

Spojnica brza CC CO2 1/2"
Quick Connector CC CO2 1/2"

328085

Code
328085

Spojnica brza CC sirup 1/2"
Quick Connector CC Syrup 1/2"

328087

Code
328087

Spojnica brza PC CO2 7/16"
Quick Connector PC CO2 7/16"

328088

Code
328088

Spojnica brza PC sirup 7/16"
Quick Connector PC Syrup 7/16"

328095

Code

328095

Stezaljka 7,0 - 8,7
Tube clip 7,0 - 8,7

328330

Code

328330

Stezaljka 7,8 - 9,5
Tube clip 7,8 - 9,5

328152

Code

328152

Stezaljka 8,8 - 10,7
Tube clip 8,8 - 10,7

328096

Code

328096

Stezaljka 10,8 - 13,3
Tube clip 10,8 - 13,3

328421

Code
328421

Stezaljka 12,3 - 14,8
Tube clip 12,3 - 14,8

328018

Code
328018

Stezaljka 13,5 - 16,0
Tube clip 13,5 - 16,0

328097

Code
328097

Stezaljka 14,5 - 17,0
Tube clip 14,5 - 17,0

328071

Code
328071

Nazuvica 7/16 UNF - Fi 7,3
Nipple 7/16 UNF - Fi 7,3

328072

Code

328072

Nazuvica 1/2 BSF - Fi 7,3

Nipple 1/2 BSF - Fi 7,3

328064

Code

328064

Matica holender 7/16" UNF

Nut 7/16" UNF

328063

Code

328063

Matica holender 1/2" BSF

Nut 1/2" BSF

328065

Code

328065

Matica holender 5/8"

Nut 5/8"

328115

Code

328115

Nazuvica 5/8", 90°

Nipple 5/8", 90°

328223

Code

328223

Nazuvica 5/8"- ravna

Streight Nipple 5/8"

703035

Code

703035

Priključak 5/8"- kpl

Complete connector 5/8"

328237

Code

328237

Spojnica metalna Y (S-S-S)

Y - Connector OD 7,2 mm

328092

Code
328092

Spojnica PVC (S-S)
Plastic coupler GS 6

328148

Code
328148

Spojnica PVC (V-S)
Plastic coupler GRS 10-6

328093

Code
328093

Spojnica PVC T (V-S-V)
Plastic coupler TRS 10-6-10

328114

Code
328114

Spojnica PVC Y (S-S-S)
Plastic coupler YS 6

353171

Code

353171

Ventil ELM 1/4" 0-10 bara
Solenoid valve 1/4" 0-10 bar

353172

Code

353172

Ventil ELM 1/4" 0-7 bara
Solenoid valve 1/4" 0-7 bar

326029

Code

326029

Ventil magnetski 13 W 0-1 bar
Solenoid valve 13 W 0-1 bar

346009

Code

346009

Turbina 938-2540/01
Turbina 938-2540/01

345006

Code

345006

Presostat GP 110 4-10 bara - 1/8"

Pressostat GP 110 4-10 bar - 1/8”

345005

Code

345005

Presostat ACB 7/16"

Pressostat ACB 7/16"

343097

Code

343097

Ventilator kompakt DP200A

Fan motor DP200A

311045

Code
311045

Cijev izolacije 6 x 6 mm
Insulation tube 6 x 6 mm

311005

Code
311005

Cijev izolacije 6 x 8 mm
Insulation tube 6 x 8 mm

311001

Code
311001

Cijev izolacije 6 x 10 mm
Insulation tube 6 x 10 mm

310088

Code
310088

Cijev izolacije 6 x 12 mm
Insulation tube 6 x 12 mm

311008

Code

311008

Cijev izolacije 6 x 22 mm
Insulation tube 6 x 22 mm)

311006

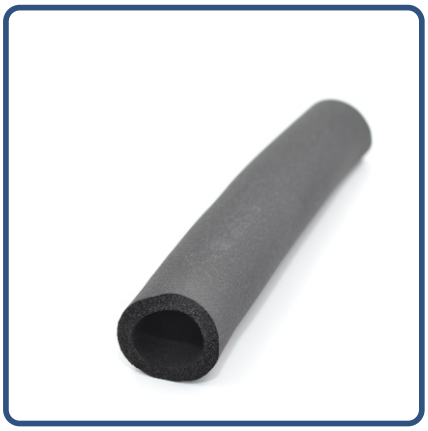

Code

311006

Cijev izolacije 6 x 25 mm
Insulation tube 6 x 25 mm

311028

Code

311028

Cijev izolacije 6 x 28 mm
Insulation tube 6 x 28 mm

326014

Code

326014

Ventil nepovratni 7/16" - 7/16"
Non return valve 7/16" - 7/16"

326026

Code

326026

Ventil nepovratni dupli 7/16" - 7/16"
Double non return valve 7/16" - 7/16"

328105

Code

328105

Ventil nepovratni CO2 KST 7/16" - 7/16"
Non return valve CO2 KST 7/16" - 7/16"

326058

Code

326058

Ventil nepovratni 3/8" - 3/8"
Non return valve 3/8" - 3/8"

328541

Code

328541

Spojnica ventil DM 3/8"-3/8"

Hand valve connector DM 3/8"-

326061

Code

326061

Ventil Presostata 1/2" 3,5-16 bara

Pressostat valve 1/2" 3,5-16 bara

328262

Code

328262

Venti VITOP za Bag in Box

Connector VITOP for Bag in Box

389018

Code

389018

Vrećica Bag in Box 10 l

Bag for Bag in Box 10 l

OPREMA d.d.

322022

Code

322022

Priključak za sanitaciju tip M

Cleaning Adaptor Type M

322021

Code

322021

Priključak za sanitaciju tip A

Cleaning Adaptor Type A

322067

Code

322067

Spremnik za sanitaciju 9 l - 2P

Cleaning Tank 9 l - 2P

322068

Code

322068

Spremnik za sanitaciju 9 l - 3P

Cleaning Tank 9 l - 3P

322161

Code

322161

Spremnik za sanitaciju 9 l - 4P

Cleaning Tank 9 l - 4P

322174

Code

322174

Igla spremnika za sanitaciju tip G

Cleaning spears Type G

322173

Code

322173

Igla spremnika za sanitaciju tip A

Cleaning spears Type A

322178

Code

322178

Igla spremnika za sanitaciju tip M

Cleaning spears Type M

322177

Code

322177

Igla spremnika za sanitaciju tip U
Cleaning spears Type U

322176

Code

322176

Igla spremnika za sanitaciju tip D
Cleaning spears Type D

322175

Code

322175

Igla spremnika za sanitaciju tip S
Cleaning spears Type S

322084

Code

322084

Filter Flojet
Cleaning spears Type M

322138

Code

322138

Filter za vodu 3M - kpl

Water filter 3M - complete

322163

Code

322163

Uložak filtera za vodu 3M

Water filter cartridge 3M

701030

Code

701030

Sabirnik 160x150x16 mm

Drip tray 160x150x16 mm

701000

Code

701000

Sabirnik 316x158x21 mm

Drip tray 316x158x21 mm

701050

Code

701050

Sabirnik 400x220x22 mm

Drip tray 400x220x22 mm

385170

Code

385170

Sabirnik 600x220x12 mm

Drip tray 600x220x12 mm

708030

Code

708030

Zavojnica 1 duga 20 m - AISI 304L

Coil 1 long 20 m - AISI 304L

708027

Code

708027

Zavojnica 2 duga 20 m - AISI 304L

Coil 2 long 20 m - AISI 304L

708018

Code

708018

Zavojnica 3 duga 20 m - AISI 304L

Coil 3 long 20 m - AISI 304L

708017

Code

708017

Zavojnica 4 duga 20 m - AISI 304L

Coil 4 long 20 m - AISI 304L

708016

Code

708016

Zavojnica 5 duga 17 m - AISI 304L

Coil 5 long 17 m- AISI 304L

708015

Code

708015

Zavojnica 6 duga 14 m - AISI 304L

Coil 6 long 14 m - AISI 304L

708024

Code

708024

Zavojnica 1 i 2 kratka 10+10m - AISI 304L

Coil 1 and 2 short 10+10m- AISI 304L

708023

Code

708023

Zavojnica 3 i 4 kratka 10+10m- AISI 304L

Coil 3 and 4 short 10+10m- AISI 304L

708022

Code

708022

Zavojnica 5 i 6 kratka 10+10m - AISI 304L
Coil 5 and 6 short 10+10m - AISI 304L

708021

Code

708021

Zavojnica 7 i 8 kratka 10+10m - AISI 304L
Coil 7 and 8 short 10+10m - AISI 304L

708020

Code

708020

Zavojnica 9 i 10 kratka 8+8m - AISI 304L
Coil 9 and 10 short 8+8m - AISI 304L

708019

Code

708019

Zavojnica 11 i 12 kratka 7+7m - AISI 304L
Coil 11 and 12 short 7+7m - AISI 304L

264100

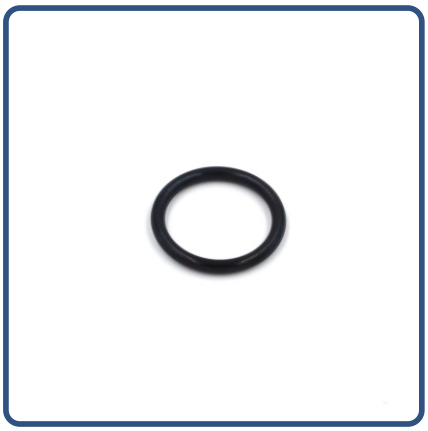

Code

264100

Brtva glave za bačvu - tip A,S,D

O-ring for dispense head - type A,S,D

264066

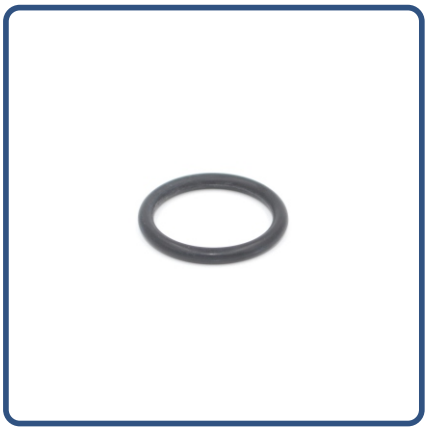

Code

264066

Brtva glave za bačvu - tip G

O ring for dispense head - type G

264067

Code

264067

Brtva glave za bačvu - tip A

O ring for dispense head - type A

264070

Code

264070

Brtva glave za bačvu - tip S

Gasket for dispense head - type S

264069

Code

264069

Brtva glave za bačvu - tip M,A,G
Gasket for dispense head - type M,A,G

264104

Code

264104

Brtva igle za bačvu - CO2
Gasket for KEG spear - CO2

264105

Code

264105

Brtva igle za bačvu - tip A
Gasket for KEG spear - Type A

264054

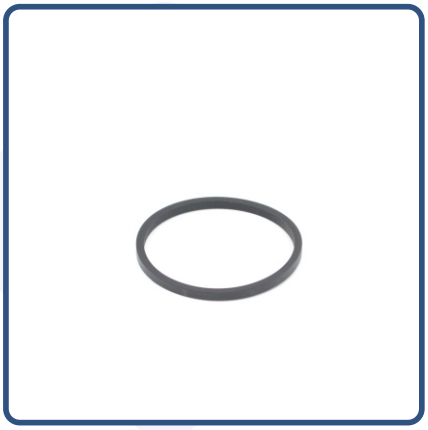

Code

264054

Brtva igle za bačvu - tip A,G
Gasket for KEG spear - Type A,G

264134

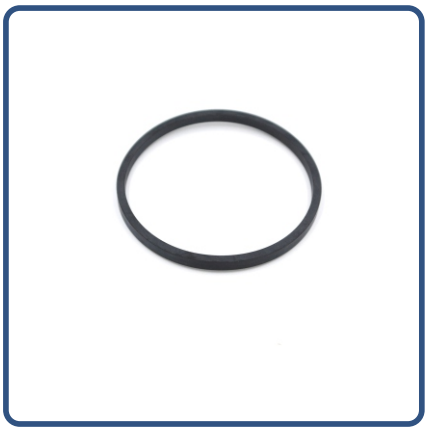

Code
264134

Brtva igle za bačvu - tip S
Gasket for KEG spear - Type S

264062

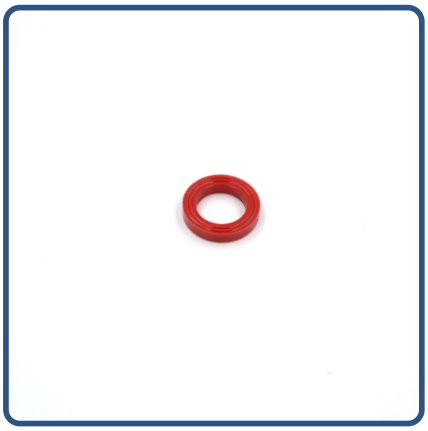

Code
264062

Brtva tijela reduktora
CO2 reducer gasket

264040

Code
264040

Brtva 18 x 13 x 2 - PE 1/2"
Gasket 18 x 13 x 2 - PE 1/2"

264053

Code
264053

Brtva 20 x 13 x 2 - PE
Gasket 20 x 13 x 2 - PE

375120

Code
375120

Nosač logotipa Fi 90 - Krom
Medallion Fi 90 - Chrome plated

375123

Code
375123

Vertikalni nosač logotipa - Krom
Vertical Medallion - Chrome plated

375124

Code
375124

Vertikalni nosač logotipa - Zlatni
Vertical Medallion - Gold plated

375008

Code
375008

Nosač logotipa Fi 90 sa maticom - Zlani
Medallion Fi 90 with nut - Gold plated

375003

Code

375003

Prsten distantni Fi 35 sa vijkom M10x8
Krom
Spacer Fi 35 with screw M10x8
Chrome plated

375066

Code

375066

Odstojnik s radiusom - zlatni
Spacer with radius - Gold plated

264105

Code

264105

Matica cijevi navojne 1 1/4" - mesing
Metal Nut 1 1/4" - Brass

OPREMA d.d.

Type **AIR PUMP**

Code **706067**

AIR PUMP - PORTABLE

TECHNICAL DATA

Weight	3,2 kg
Widht	182 mm
Depth	174 mm
Height	140 mm

TECHNICAL SPECIFICATION

Casing:	Stainless steel decorative
Max air pressure	5 bar
Adjustable air pressure	2 - 5 bar
Free flow rate	20 l/min

TECHNICAL EL. SPECIFICATION

Voltage/Frequency:	230 V 50 Hz
Power:	0,085 kW
Run:	0,45 A

www.oprema.com
Copyright © 2018.
Oprema d.d.

OPREMA reserves the right to modify at any time the technical data and specifications reported herein, as the result of technical updating and improvement.

Shema spajanja Pivo-CO2 / Connection scheme Beer-CO2

Spajanje sa stezaljkama / Connection with tube clips

Podpultni aparat za hlađenje sa
konzolom za istakanje
1 linija - (1 Reduktor pritiska, 1 bačva za pivo)
Undercounter cooler with tower,
1 line - (1 Reducer, 1 Keg)

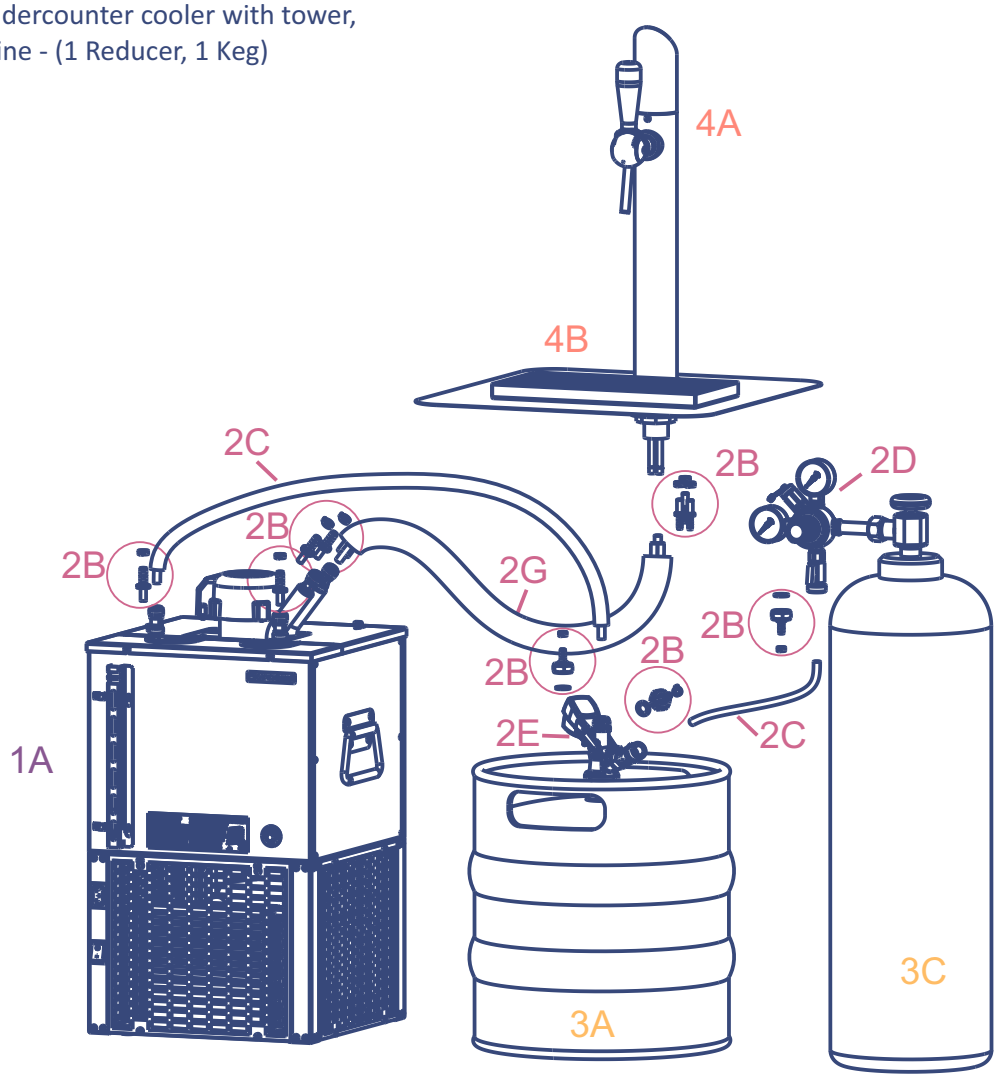

1 APARAT
1A APARAT ZA HLAĐENJE
2 PRIBOR
2B STEZALJKA
2C CRIJEVO
2D REDUKTOR PRITISKA
2E GLAVA ZA BAČVU
2G PYTHON
3 POSUDA ZA NAPITKE I PLIN ZA POTISKIVANJE
3A BAČVA ZA PIVO
3C BOCA CO2
4 KONZOLA ZA ISTAKANJE
4A KONZOLA
4B SABIRNIK

1 COOLING UNITS
1A UNDERCOUNTER UNIT
2 ACCESSORIES
2B TUBE CLIP
2C TUBE
2D REDUCER
2E DISPENSE HEAD
2G PYTHON
3 BEVERAGE CONTAINER & GAS BOTTLES
3A BEER KEG
3C BOTTLE CO2
4 TOWERS
4A TOWER
4B DRIP TRAY

OPREMA reserves the right to modify at any time the technical data and specifications reported herein, as the result of technical updating and improvement.

OPREMA d.d.

Shema spajanja Pivo-CO2 / Connection scheme Beer-CO2

Spajanje sa stezaljkama / Connection with tube clips

Nadpultni aparat za hlađenje i točenje
1 linija - (1 Reduktor pritiska, 1 bačva za pivo)
Overcounter cooler ,
1 line - (1 Reducer, 1 Keg)

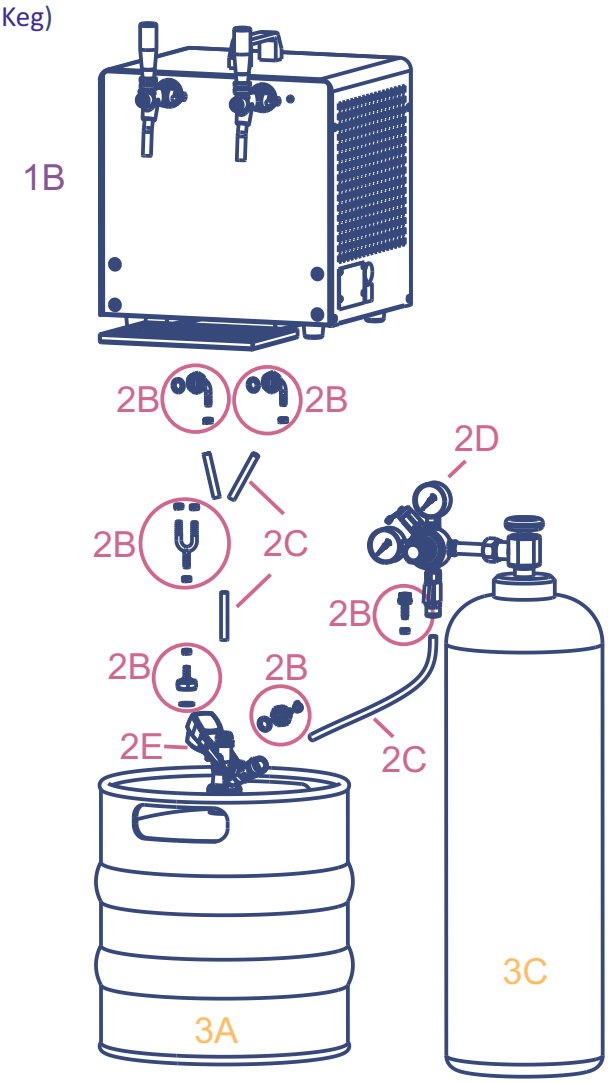

1 APARAT
1B APARAT ZA HLAĐENJE
2 PRIBOR
2B STEZALJKA
2C CRIJEVO
2D REDUKTOR PRITISKA
2E GLAVA ZA BAČVU

3 POSUDA ZA NAPITKE I PLIN ZA POTISKIVANJE
3A BAČVA ZA PIVO
3C BOCA CO2

1 COOLING UNITS
1B OVERCOUNTER UNIT
2 ACCESSORIES
2B TUBE CLIP
2C TUBE
2D REDUCER
2E DISPENSE HEAD

3 BEVERAGE CONTAINER & GAS BOTTLES
3A BEER KEG
3C BOTTLE CO2

OPREMA reserves the right to modify at any time the technical data and specifications reported herein, as the result of technical updating and improvement.

OPREMA d.d.

Shema spajanja Pivo-CO2 / Connection scheme Beer-CO2

Spajanje sa stezaljkama / Connection with tube clips

Nadpultni aparat za hlađenje i točenje
2 linije - (1 Reduktor pritiska, 2 bačva za pivo)
Overcounter cooler ,
2 lines - (1 Reducer, 2 Kegs)

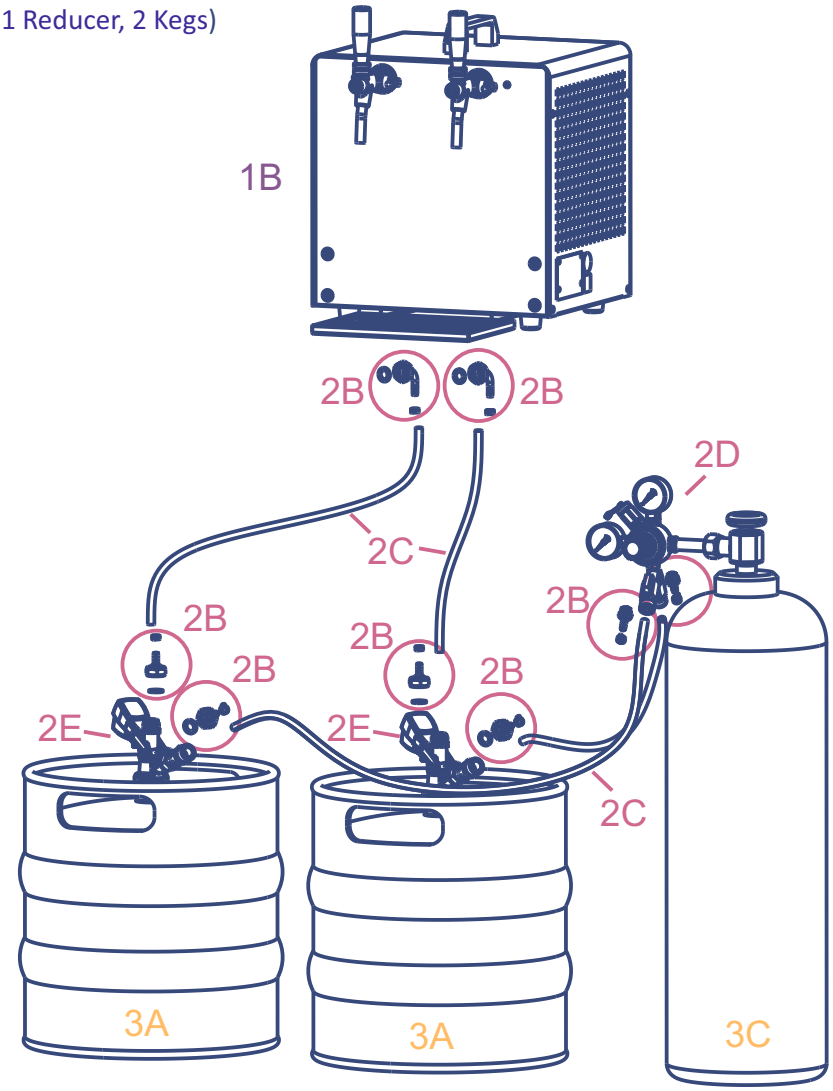

1 APARAT
1B APARAT ZA HLAĐENJE
2 PRIBOR
2B STEZALJKA
2C CRIJEVO
2D REDUKTOR PRITISKA
2E GLAVA ZA BAČVU

3 POSUDA ZA NAPITKE I PLIN ZA POTISKIVANJE
3A BAČVA ZA PIVO
3C BOCA CO2

1 COOLING UNITS
1B OVERCOUNTER UNIT
2 ACCESSORIES
2B TUBE CLIP
2C TUBE
2D REDUCER
2E DISPENSE HEAD

3 BEVERAGE CONTAINER & GAS BOTTLES
3A BEER KEG
3C BOTTLE CO2

OPREMA reserves the right to modify at any time the technical data and specifications reported herein, as the result of technical updating and improvement.

OPREMA d.d.

Shema spajanja Pivo-CO2 / Connection scheme Beer-CO2

Spajanje sa stezaljkama / Connection with tube clips

Nadpultni aparat za hlađenje i točenje
2 linije - (2 Reduktora pritiska, 2 bačve za pivo)
Overcounter cooler ,
2 lines - (2 Reducers, 2 Kegs)

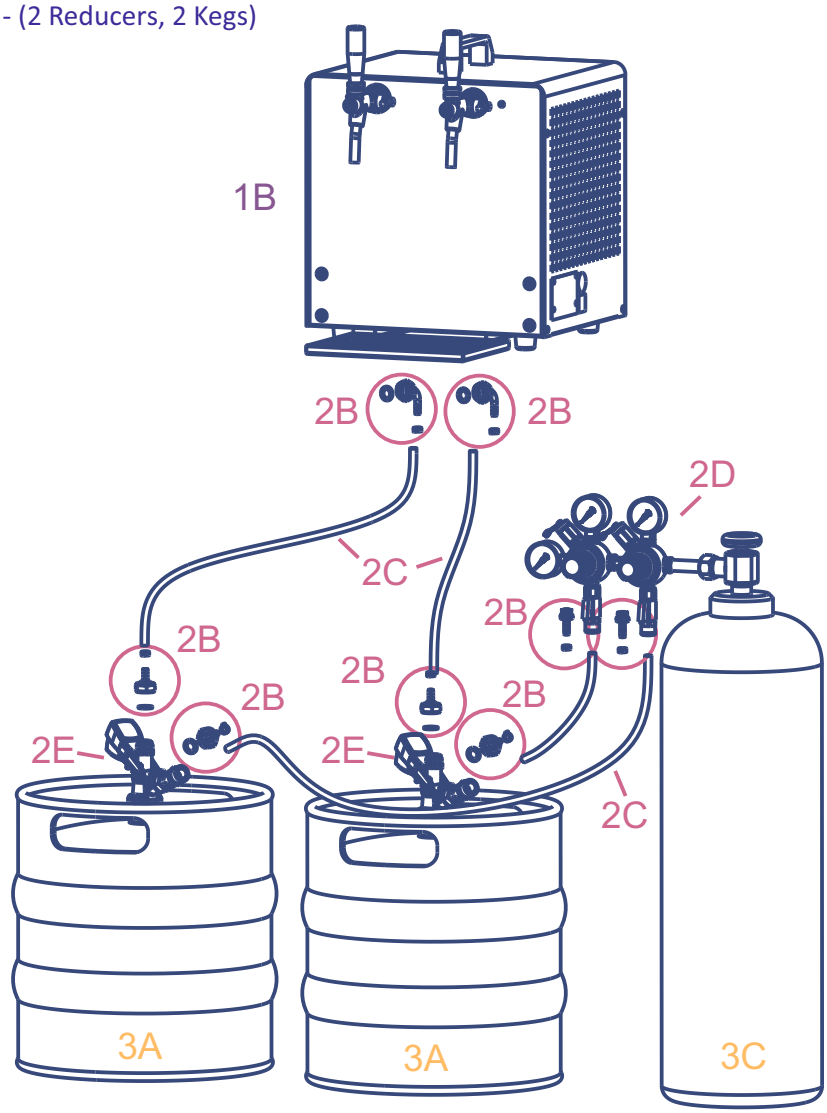

1 APARAT
1B APARAT ZA HLAĐENJE
2 PRIBOR
2B STEZALJKA
2C CRIJEVO
2D REDUKTOR PRITISKA
2E GLAVA ZA BAČVU

3 POSUDA ZA NAPITKE I PLIN ZA POTISKIVANJE
3A BAČVA ZA PIVO
3C BOCA CO2

1 COOLING UNITS
1B OVERCOUNTER UNIT
2 ACCESSORIES
2B TUBE CLIP
2C TUBE
2D REDUCER
2E DISPENSE HEAD

3 BEVERAGE CONTAINER & GAS BOTTLES
3A BEER KEG
3C BOTTLE CO2

OPREMA reserves the right to modify at any time the technical data and specifications reported herein, as the result of technical updating and improvement.

OPREMA d.d.

Shema spajanja Pivo-CO2 / Connection scheme Beer-CO2

Spajanje sa JG spojnicama / Connection with JG connectors

Podpultni aparat za hlađenje sa konzolom za istakanje
1 linija - (1 Reduktor pritiska, 1 bačva za pivo)
Undercounter cooler with tower,
1 line - (1 Reducer, 1 Keg)

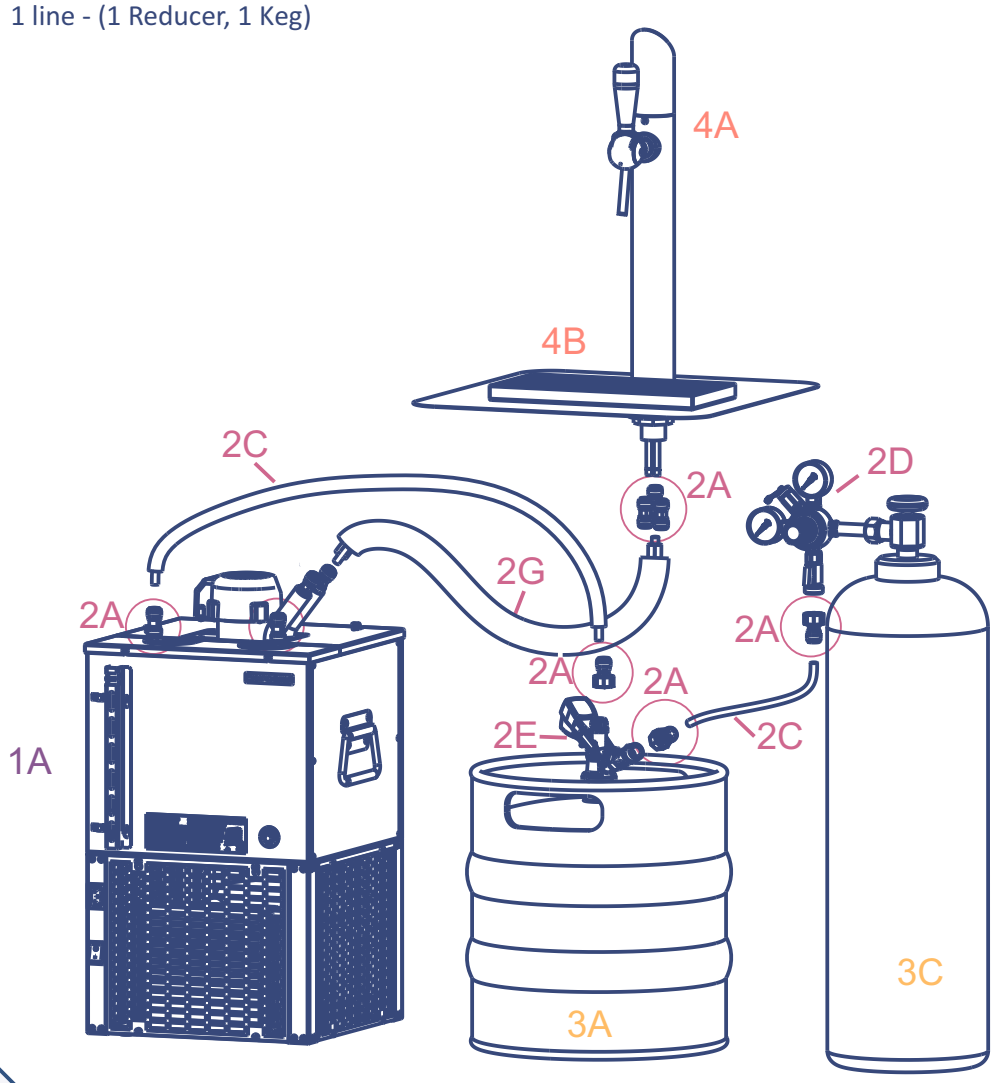

1 APARAT
1A APARAT ZA HLAĐENJE
2 PRIBOR
2A BRZA SPOJNICA
2C CRIJEVO
2D REDUKTOR PRITISKA
2E GLAVA ZA BAČVU
2G PYTHON
3 POSUDA ZA NAPITKE I PLIN ZA POTISKIVANJE
3A BAČVA ZA PIVO
3C BOCA CO2
4 KONZOLA ZA ISTAKANJE
4A KONZOLA
4B SABIRNIK

1 COOLING UNITS
1A UNDERCOUNTER UNIT
2 ACCESSORIES
2A JG CONNECTOR
2C TUBE
2D REDUCER
2E DISPENSE HEAD
2G PYTHON
3 BEVERAGE CONTAINER & GAS BOTTLES
3A BEER KEG
3C BOTTLE CO2
4 TOWERS
4A TOWER
4B DRIP TRAY

OPREMA reserves the right to modify at any time the technical data and specifications reported herein, as the result of technical updating and improvement.

OPREMA d.d.

Shema spajanja Pivo-CO2 / Connection scheme Beer-CO2

Spajanje sa JG spojnicama / Connection with JG connectors

Nadpultni aparat za hlađenje i točenje
1 linija - (1 Reduktor pritiska, 1 bačva za pivo)
Overcounter cooler ,
1 line - (1 Reducer, 1 Keg)

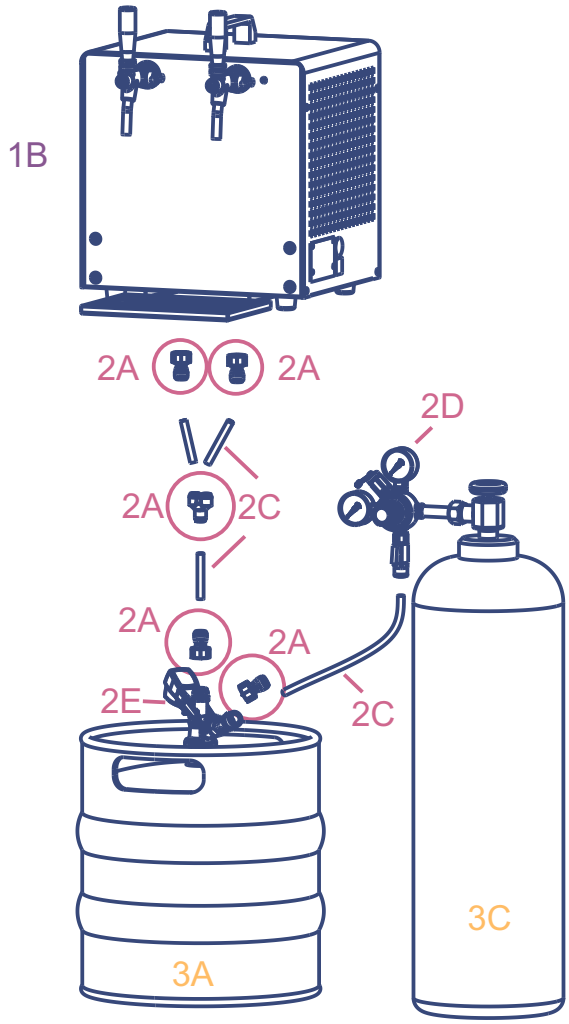

1 APARAT
1B APARAT ZA HLAĐENJE
2 PRIBOR
2A BRZA SPOJNICA
2C CRIJEVO
2D REDUKTOR PRITISKA
2E GLAVA ZA BAČVU

3 POSUDA ZA NAPITKE I PLIN ZA POTISKIVANJE
3A BAČVA ZA PIVO
3C BOCA CO2

1 COOLING UNITS
1B OVERCOUNTER UNIT
2 ACCESSORIES
2B JG CONNECTOR
2C TUBE
2D REDUCER
2E DISPENSE HEAD

3 BEVERAGE CONTAINER & GAS BOTTLES
3A BEER KEG
3C BOTTLE CO2

OPREMA reserves the right to modify at any time the technical data and specifications reported herein, as the result of technical updating and improvement.

OPREMA d.d.

Shema spajanja Pivo-CO2 / Connection scheme Beer-CO2

Spajanje sa JG spojnicama / Connection with JG connectors

Nadpultni aparat za hlađenje i točenje
2 linije - (1 Reduktor pritiska, 2 bačva za pivo)
Overcounter cooler ,
2 lines - (1 Reducer, 2 Kegs)

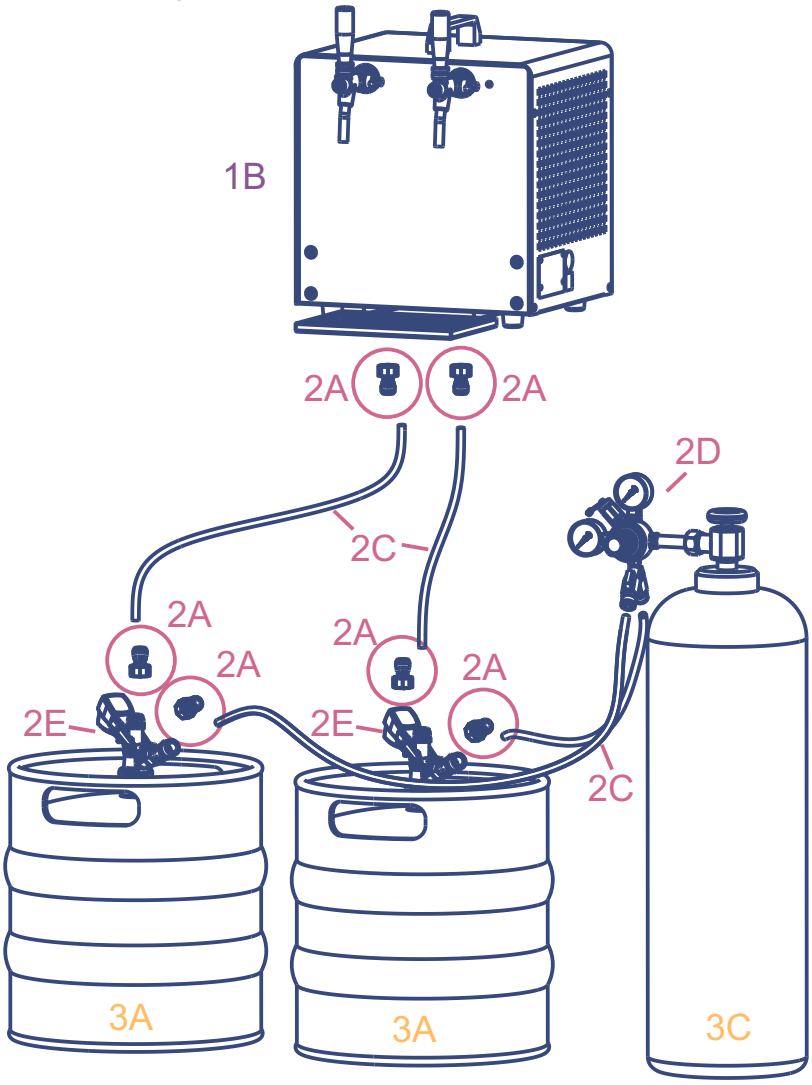

1 APARAT
1B APARAT ZA HLAĐENJE
2 PRIBOR
2A BRZA SPOJNICA
2C CRIJEVO
2D REDUKTOR PRITISKA
2E GLAVA ZA BAČVU

3 POSUDA ZA NAPITKE I PLIN ZA POTISKIVANJE
3A BAČVA ZA PIVO
3C BOCA CO2

1 COOLING UNITS
1B OVERCOUNTER UNIT
2 ACCESSORIES
2A JG CONNECTOR
2C TUBE
2D REDUCER
2E DISPENSE HEAD

3 BEVERAGE CONTAINER & GAS BOTTLES
3A BEER KEG
3C BOTTLE CO2

OPREMA reserves the right to modify at any time the technical data and specifications reported herein, as the result of technical updating and improvement.

OPREMA d.d.

Shema spajanja Pivo-CO2 / Connection scheme Beer-CO2

Spajanje sa JG spojnicama / Connection with JG connectors

Nadpultni aparat za hlađenje i točenje
2 linije - (2 Reduktora pritiska, 2 bačve za pivo)
Overcounter cooler ,
2 lines - (2 Reducers, 2 Kegs)

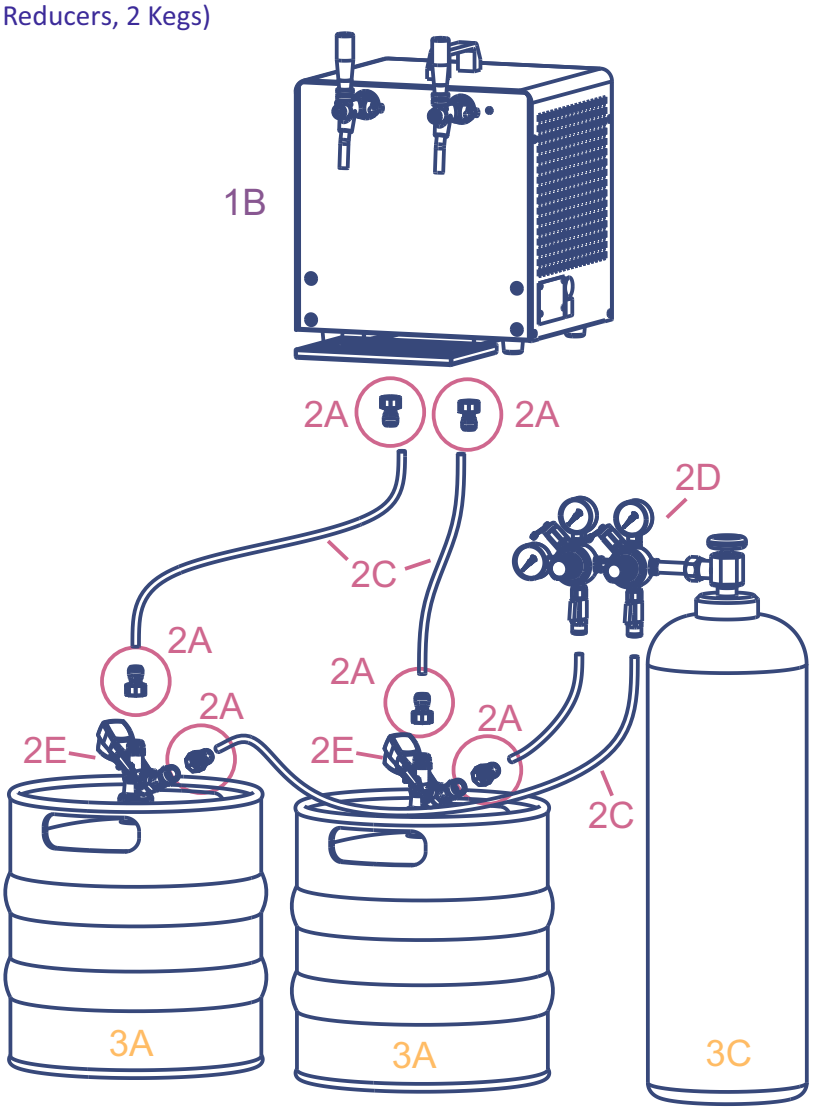

1 APARAT
1B APARAT ZA HLAĐENJE
2 PRIBOR
2A BRZA SPOJNICA
2C CRIJEVO
2D REDUKTOR PRITISKA
2E GLAVA ZA BAČVU

3 POSUDA ZA NAPITKE I PLIN ZA POTISKIVANJE
3A BAČVA ZA PIVO
3C BOCA CO2

1 COOLING UNITS
1B OVERCOUNTER UNIT
2 ACCESSORIES
2A JG CONNECTOR
2C TUBE
2D REDUCER
2E DISPENSE HEAD

3 BEVERAGE CONTAINER & GAS BOTTLES
3A BEER KEG
3C BOTTLE CO2

OPREMA reserves the right to modify at any time the technical data and specifications reported herein, as the result of technical updating and improvement.

OPREMA d.d.

Shema spajanja Pivo-Zračna pumpa / Connection scheme Beer-Air pump

Spajanje sa stezaljkama / Connection with tube clips

Nadpultni aparat za hlađenje i točenje
1 linija - (1 zračna pumpa, 1 bačva za pivo)
Overcounter cooler,
1 line - (1 Air pump, 1 Keg)

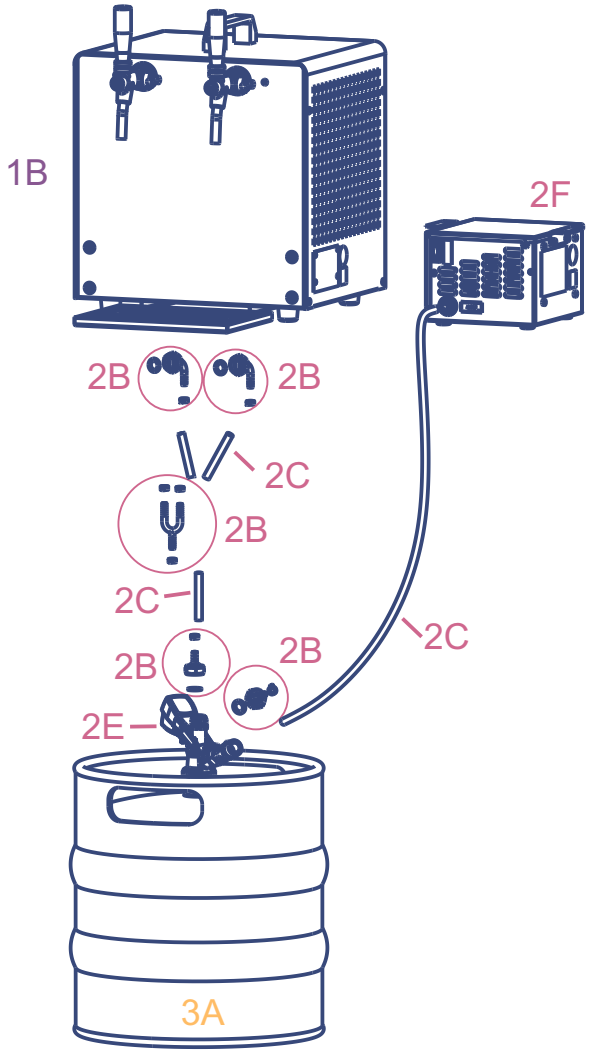

1 APARAT
1B APARAT ZA HLAĐENJE
2 PRIBOR
2B STEZALJKA
2C CRIJEVO
2E GLAVA ZA BAČVU
2F PUMPA ZA POTISKIVANJE

3 POSUDA ZA NAPITKE I PLIN ZA POTISKIVANJE
3A BAČVA ZA PIVO

1 COOLING UNITS
1B OVERCOUNTER UNIT
2 ACCESSORIES
2B TUBE CLIP
2C TUBE
2E DISPENSE HEAD
2F AIR PUMP

3 BEVERAGE CONTAINER & GAS BOTTLES
3A BEER KEG

OPREMA reserves the right to modify at any time the technical data and specifications reported herein, as the result of technical updating and improvement.

OPREMA d.d.

Shema spajanja Pivo-Zračna pumpa / Connection scheme Beer-Air pump

Spajanje sa stezaljkama / Connection with tube clips

Nadpultni aparat za hlađenje i točenje
2 linije - (1 zračna pumpa, 2 bačve za pivo)
Overcounter cooler ,
2 lines - (1 Air pump, 2 Kegs)

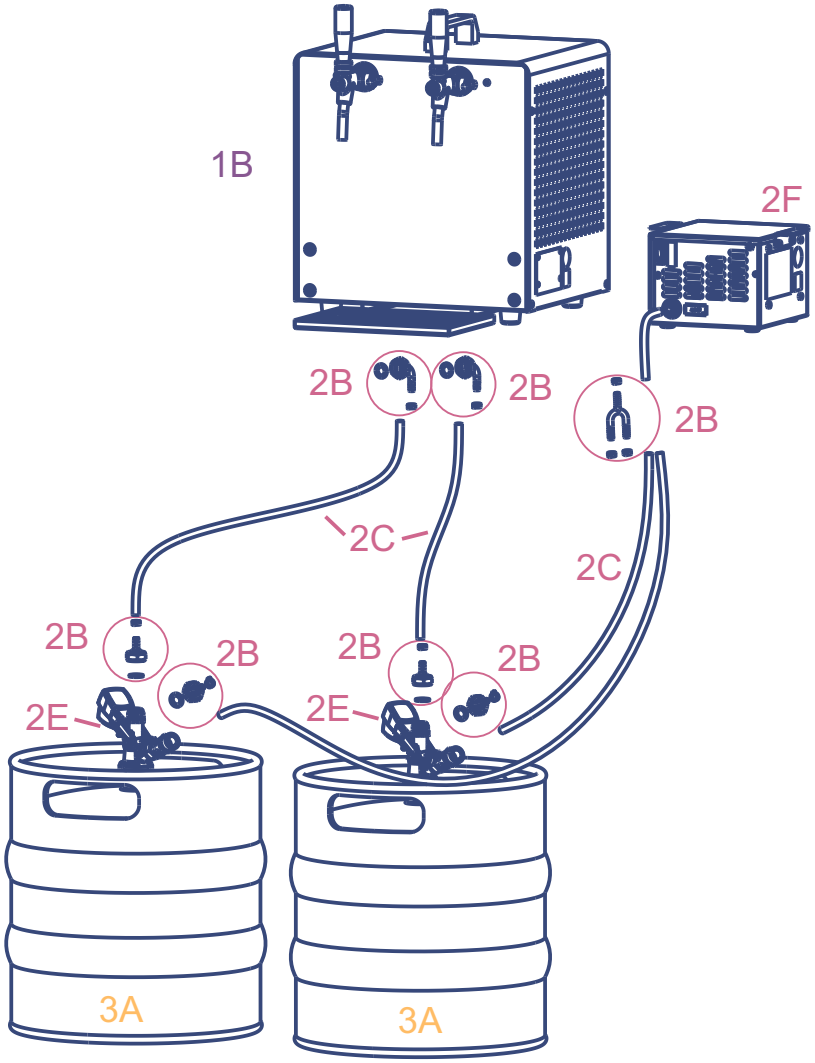

1 APARAT
1B APARAT ZA HLAĐENJE
2 PRIBOR
2B STEZALJKA
2C CRIJEVO
2E GLAVA ZA BAČVU
2F PUMPA ZA POTISKIVANJE

3 POSUDA ZA NAPITKE I PLIN ZA POTISKIVANJE
3A BAČVA ZA PIVO

1 COOLING UNITS
1B OVERCOUNTER UNIT
2 ACCESSORIES
2B TUBE CLIP
2C TUBE
2E DISPENSE HEAD
2F AIR PUMP

3 BEVERAGE CONTAINER & GAS BOTTLES
3A BEER KEG

OPREMA reserves the right to modify at any time the technical data and specifications reported herein, as the result of technical updating and improvement.

OPREMA d.d.

Shema spajanja Pivo-Zračna pumpa / Connection scheme Beer-Air pump

Spajanje sa stezaljkama / Connection with tube clips

Nadpultni aparat za hlađenje i točenje sa zračnom pumpom
1 linija - (1 bačva za pivo)
Overcounter cooler with air pump ,
1 line - (1 Keg)

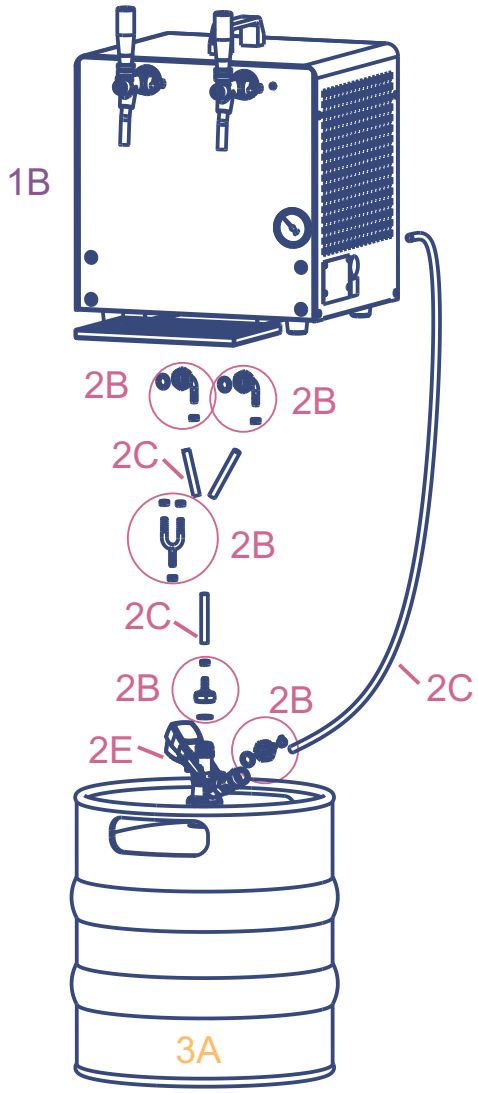

1 APARAT
1B APARAT ZA HLAĐENJE
2 PRIBOR
2B STEZALJKA
2C CRIJEVO
2E GLAVA ZA BAČVU

3 POSUDA ZA NAPITKE I PLIN ZA POTISKIVANJE
3A BAČVA ZA PIVO

1 COOLING UNITS
1B OVERCOUNTER UNIT
2 ACCESSORIES
2B TUBE CLIP
2C TUBE
2E DISPENSE HEAD

3 BEVERAGE CONTAINER & GAS BOTTLES
3A BEER KEG

OPREMA reserves the right to modify at any time the technical data and specifications reported herein, as the result of technical updating and improvement.

OPREMA d.d.

Shema spajanja Pivo-Zračna pumpa / Connection scheme Beer-Air pump

Spajanje sa stezaljkama / Connection with tube clips

Nadpultni aparat za hlađenje i točenje sa zračnom pumpom
2 linije - (2 bačve za pivo)
Overcounter cooler with air pump,
2 lines - (2 Kegs)

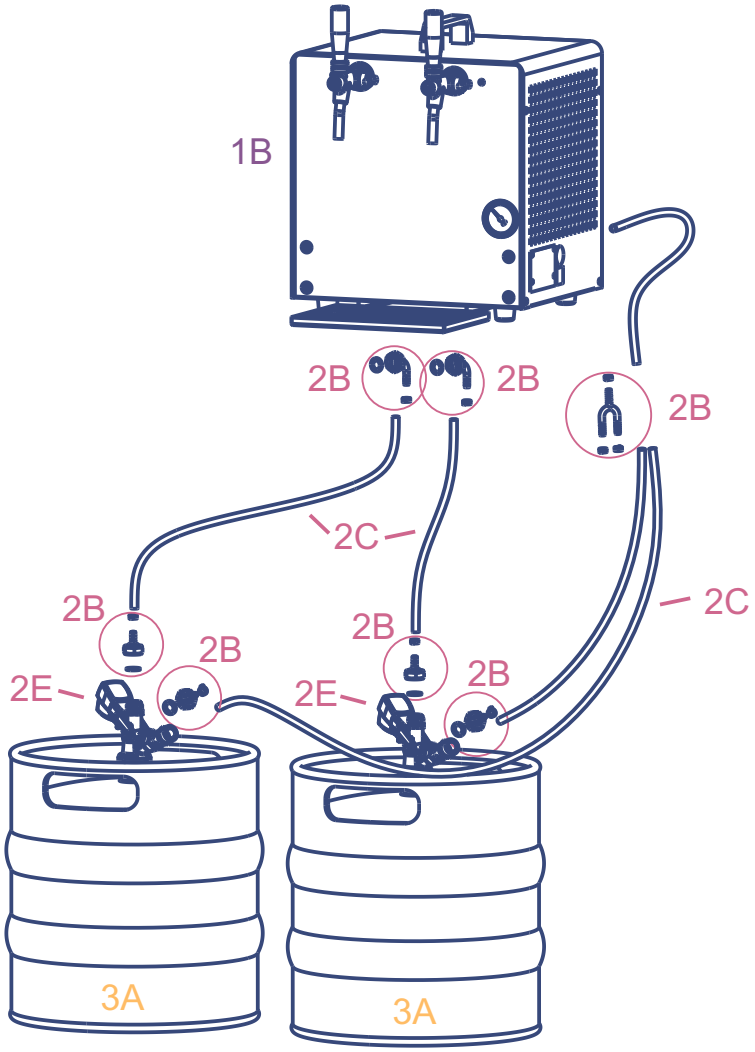

1 APARAT
1B APARAT ZA HLAĐENJE
2 PRIBOR
2B STEZALJKA
2C CRIJEVO
2E GLAVA ZA BAČVU

3 POSUDA ZA NAPITKE I PLIN ZA POTISKIVANJE
3A BAČVA ZA PIVO

1 COOLING UNITS
1B OVERCOUNTER UNIT
2 ACCESSORIES
2B TUBE CLIP
2C TUBE
2E DISPENSE HEAD

3 BEVERAGE CONTAINER & GAS BOTTLES
3A BEER KEG

OPREMA reserves the right to modify at any time the technical data and specifications reported herein, as the result of technical updating and improvement.

OPREMA d.d.

Shema spajanja Pivo-Zračna pumpa / Connection scheme Beer-Air pump

Spajanje sa JG spojnicama / Connection with JG connectors

Nadpultni aparat za hlađenje i točenje
1 linija - (1 zračna pumpa, 1 bačva za pivo)
Overcounter cooler,
1 line - (1 Air pump, 1 Keg)

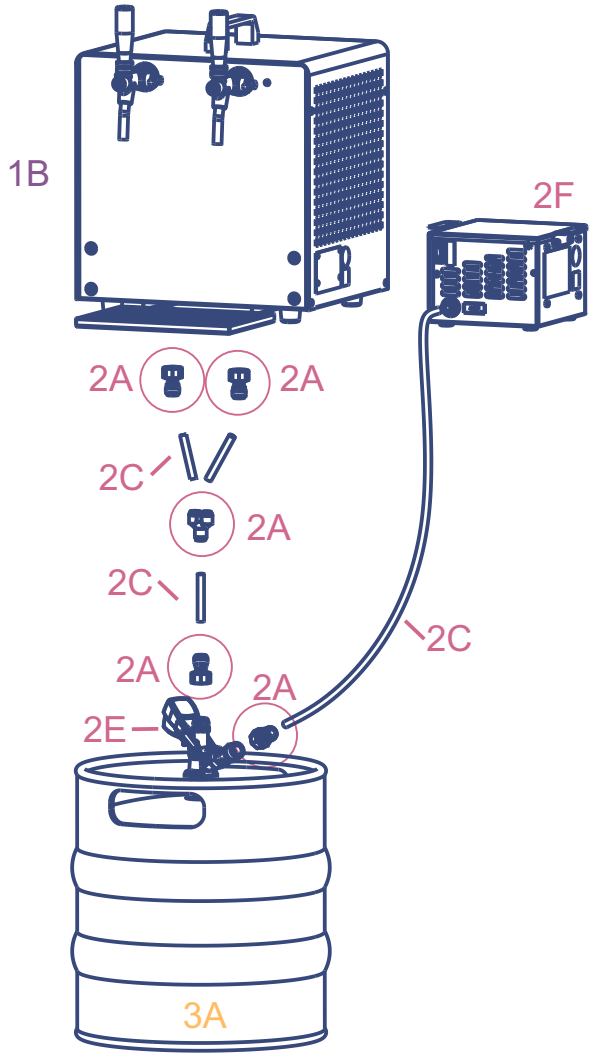

1 APARAT
1B APARAT ZA HLAĐENJE
2 PRIBOR
2A BRZA SPOJNICA
2C CRIJEVO
2E GLAVA ZA BAČVU
2F PUMPA ZA POTISKIVANJE

3 POSUDA ZA NAPITKE I PLIN ZA POTISKIVANJE
3A BAČVA ZA PIVO

1 COOLING UNITS
1B OVERCOUNTER UNIT
2 ACCESSORIES
2A JG CONNECTOR
2C TUBE
2E DISPENSE HEAD
2F AIR PUMP

3 BEVERAGE CONTAINER & GAS BOTTLES
3A BEER KEG

OPREMA reserves the right to modify at any time the technical data and specifications reported herein, as the result of technical updating and improvement.

OPREMA d.d.

Shema spajanja Pivo-Zračna pumpa / Connection scheme Beer-Air pump

Spajanje sa JG spojnicama / Connection with JG connectors

Nadpultni aparat za hlađenje i točenje
2 linije - (1 zračna pumpa, 2 bačve za pivo)
Overcounter cooler ,
2 lines - (1 Air pump, 2 Kegs)

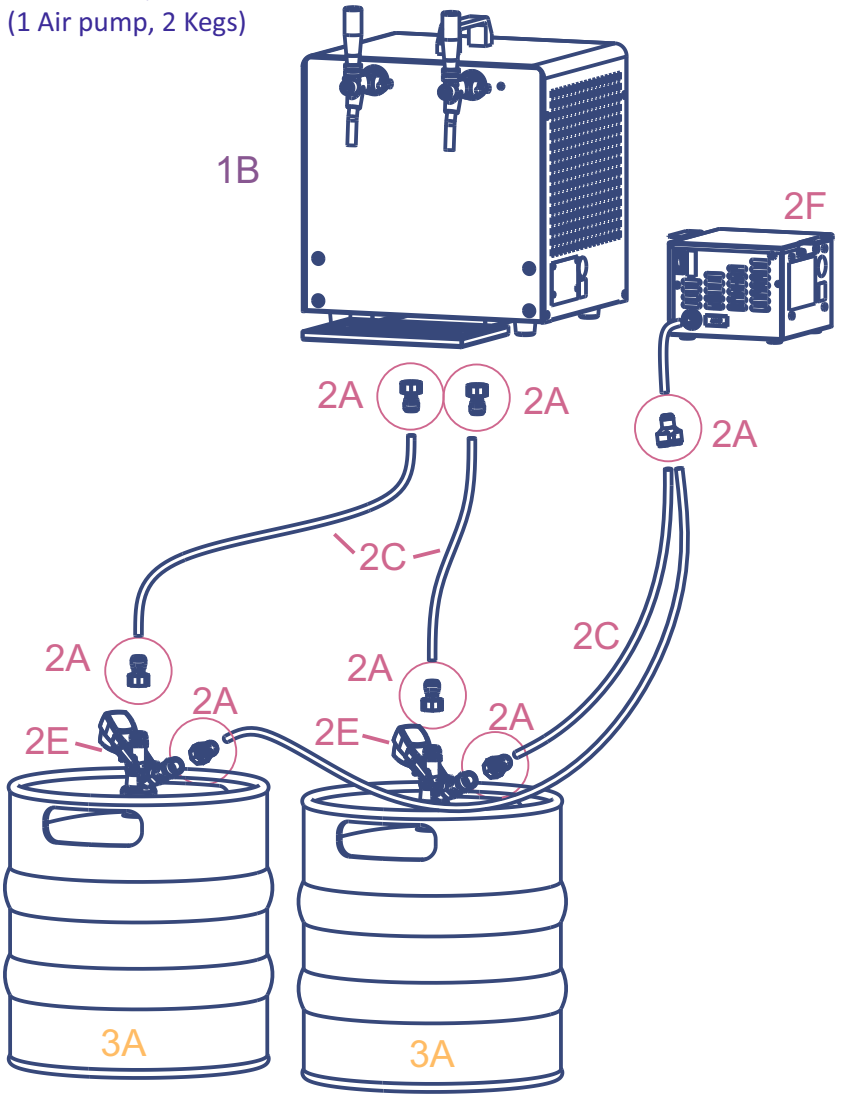

1 APARAT
1B APARAT ZA HLAĐENJE
2 PRIBOR
2A BRZA SPOJNICA
2C CRIJEVO
2E GLAVA ZA BAČVU
2F PUMPA ZA POTISKIVANJE

3 POSUDA ZA NAPITKE I PLIN ZA POTISKIVANJE
3A BAČVA ZA PIVO

1 COOLING UNITS
1B OVERCOUNTER UNIT
2 ACCESSORIES
2A JG CONNECTOR
2C TUBE
2E DISPENSE HEAD
2F AIR PUMP

3 BEVERAGE CONTAINER & GAS BOTTLES
3A BEER KEG

OPREMA reserves the right to modify at any time the technical data and specifications reported herein, as the result of technical updating and improvement.

OPREMA d.d.

Shema spajanja Pivo-Zračna pumpa / Connection scheme Beer-Air pump

Spajanje sa JG spojnicama / Connection with JG connectors

Nadpultni aparat za hlađenje i točenje sa zračnom pumpom
1 linija - (1 bačva za pivo)
Overcounter cooler with air pump ,
1 line - (1 Keg)

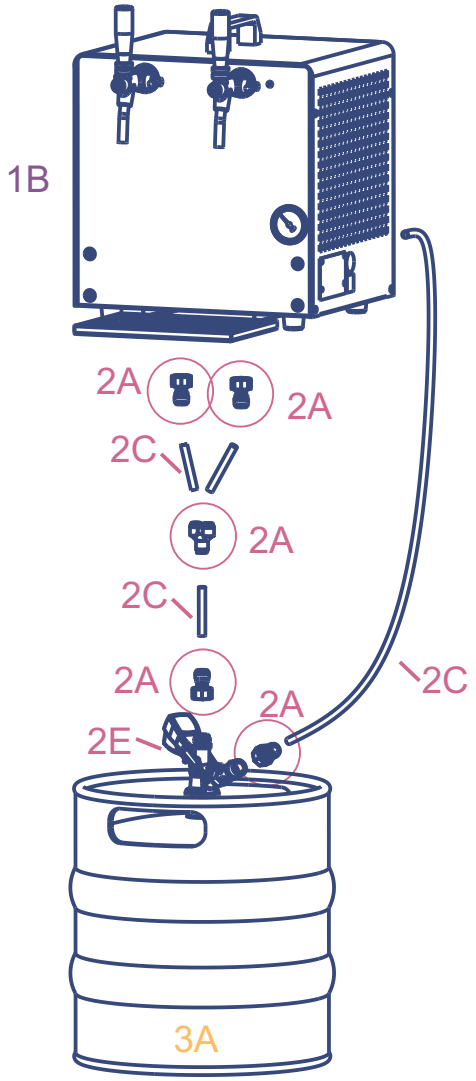

1 APARAT
1B APARAT ZA HLAĐENJE
2 PRIBOR
2A BRZA SPOJNICA
2C CRIJEVO
2E GLAVA ZA BAČVU

3 POSUDA ZA NAPITKE I PLIN ZA POTISKIVANJE
3A BAČVA ZA PIVO

1 COOLING UNITS
1B OVERCOUNTER UNIT
2 ACCESSORIES
2A JG CONNECTOR
2C TUBE
2E DISPENSE HEAD

3 BEVERAGE CONTAINER & GAS BOTTLES
3A BEER KEG

OPREMA reserves the right to modify at any time the technical data and specifications reported herein, as the result of technical updating and improvement.

OPREMA d.d.

Shema spajanja Pivo-Zračna pumpa / Connection scheme Beer-Air pump

Spajanje sa JG spojnicama / Connection with JG connectors

Nadpultni aparat za hlađenje i točenje sa zračnom pumpom
2 linije - (2 bačve za pivo)
Overcounter cooler with air pump,
2 lines - (2 Kegs)

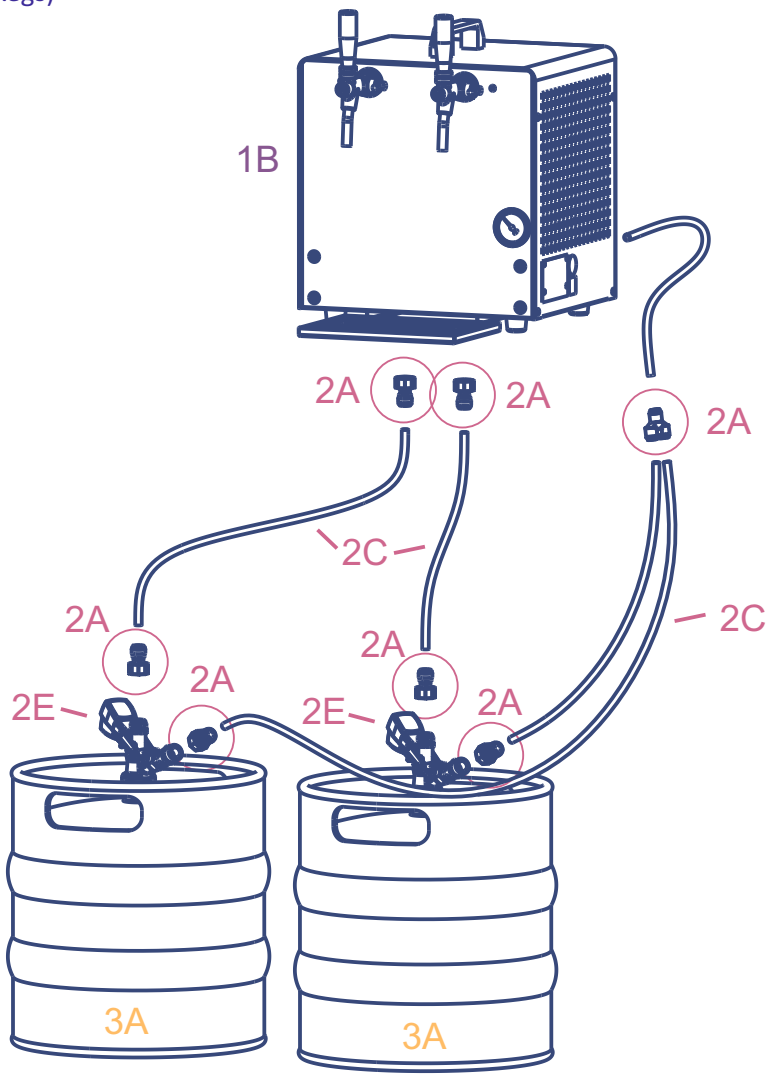

1 APARAT
1B APARAT ZA HLAĐENJE
2 PRIBOR
2A BRZA SPOJNICA
2C CRIJEVO
2E GLAVA ZA BAČVU

3 POSUDA ZA NAPITKE I PLIN ZA POTISKIVANJE
3A BAČVA ZA PIVO

1 COOLING UNITS
1B OVERCOUNTER UNIT
2 ACCESSORIES
2A JG CONNECTOR
2C TUBE
2E DISPENSE HEAD

3 BEVERAGE CONTAINER & GAS BOTTLES
3A BEER KEG

OPREMA reserves the right to modify at any time the technical data and specifications reported herein, as the result of technical updating and improvement.

OPREMA d.d.

Shema spajanja Vino-N2 / Connection scheme Wine-N2

Spajanje sa stezaljkama / Connection with tube clips

Nadpultni aparat za hlađenje
1 linija - (1 Reduktor pritiska, 1 kontejner za vino)
Overcounter cooler
1 line - (1 Reducer, 1 Container)

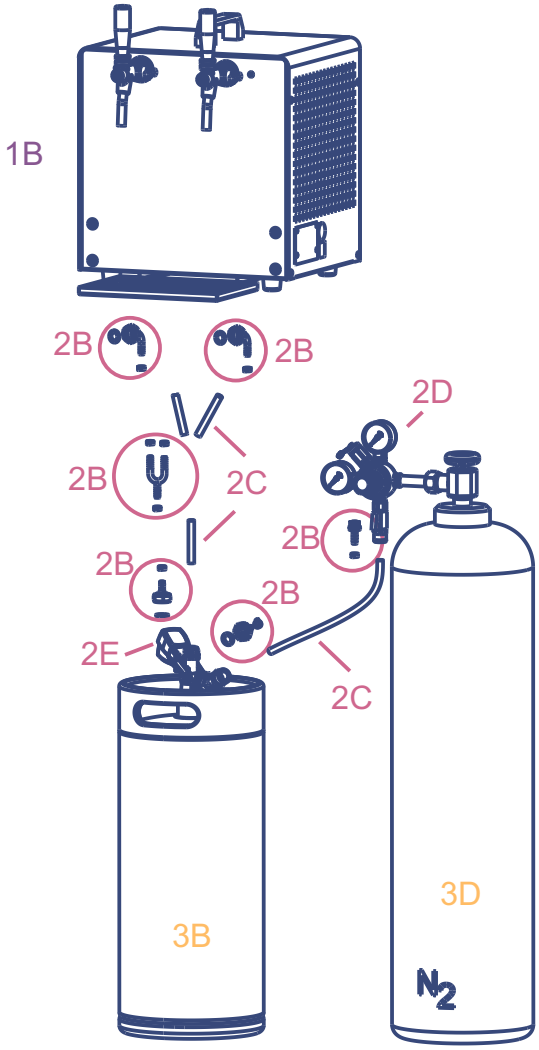

1 APARAT
1B APARAT ZA HLAĐENJE
2 PRIBOR
2B STEZALJKA
2C CRIJEVO
2D REDUKTOR PRITISKA
2E GLAVA ZA BAČVU

3 POSUDA ZA NAPITKE I PLIN ZA POTISKIVANJE
3B KONTEJNER ZA VINO
3C BOCA N2

1 COOLING UNITS
1B OVERCOUNTER UNIT
2 ACCESSORIES
2B TUBE CLIP
2C TUBE
2D REDUCER
2E DISPENSE HEAD

3 BEVERAGE CONTAINER & GAS BOTTLES
3B CONTAINER FOR WINE
3C BOTTLE N2

OPREMA reserves the right to modify at any time the technical data and specifications reported herein, as the result of technical updating and improvement.

OPREMA d.d.

Shema spajanja Vino-N2 / Connection scheme Wine-N2

Spajanje sa stezaljkama / Connection with tube clips

Nadpultni aparat za hlađenje
2 linije - (1 Reduktor pritiska, 2 kontejnera za vino)
Overcounter cooler
2 lines - (1 Reducer, 2 Containers)

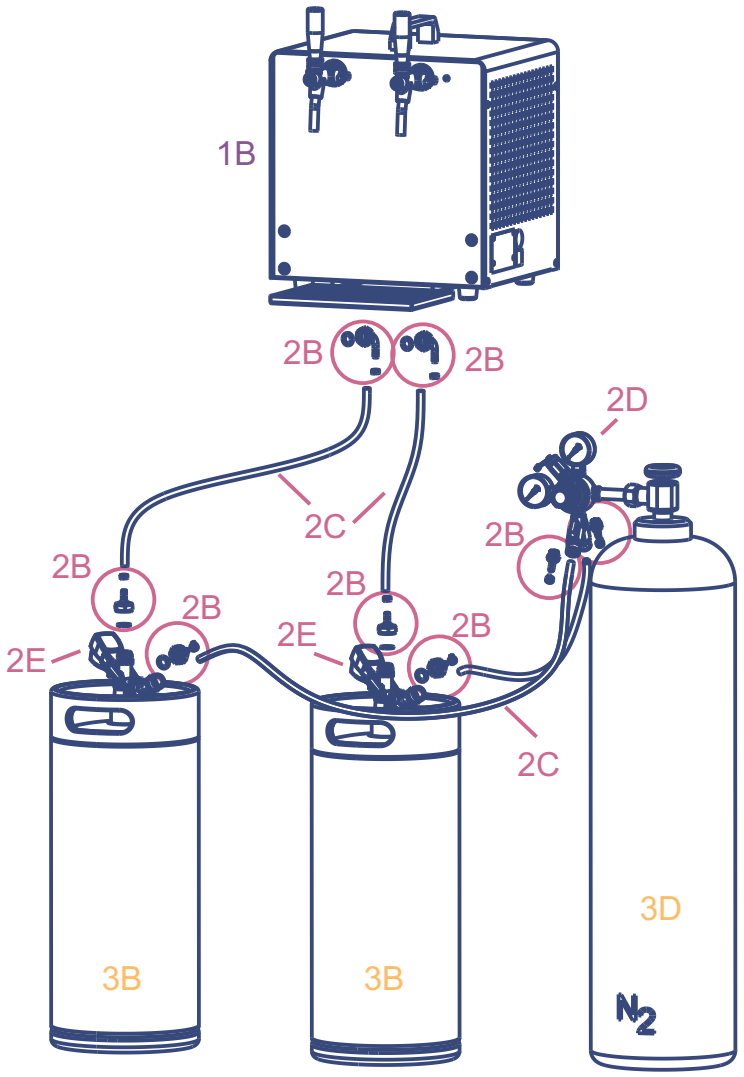

1 APARAT
1B APARAT ZA HLAĐENJE
2 PRIBOR
2B STEZALJKA
2C CRIJEVO
2D REDUKTOR PRITISKA
2E GLAVA ZA BAČVU

3 POSUDA ZA NAPITKE I PLIN ZA POTISKIVANJE
3B KONTEJNER ZA VINO
3C BOCA N2

1 COOLING UNITS
1B OVERCOUNTER UNIT
2 ACCESSORIES
2B TUBE CLIP
2C TUBE
2D REDUCER
2E DISPENSE HEAD

3 BEVERAGE CONTAINER & GAS BOTTLES
3B CONTAINER FOR WINE
3C BOTTLE N2

OPREMA reserves the right to modify at any time the technical data and specifications reported herein, as the result of technical updating and improvement.

OPREMA d.d.

Shema spajanja Vino-N2 / Connection scheme Wine-N2

Spajanje sa stezaljkama / Connection with tube clips

Nadpultni aparat za kuhano vino
1 linija - (1 Reduktor pritiska, 1 kontejner za vino)
Overcounter unit for mulled wine
1 line - (1 Reducer, 1 Container)

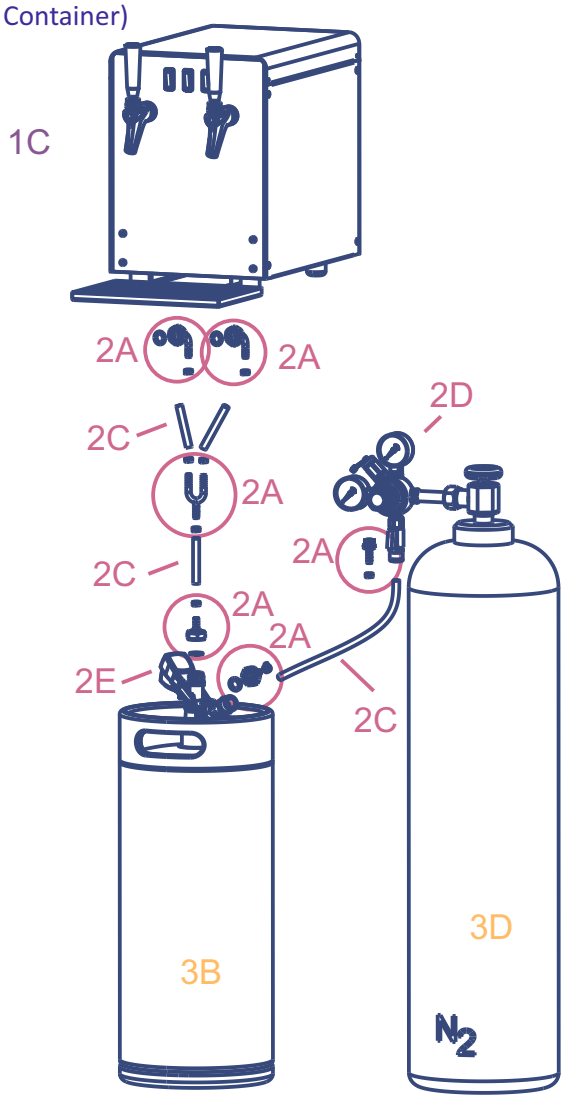

1 APARAT
1C APARAT ZA GRIJANJE I TOČENJE
2 PRIBOR
2B STEZALJKA
2C CRIJEVO
2D REDUKTOR PRITISKA
2E GLAVA ZA BAČVU

3 POSUDA ZA NAPITKE I PLIN ZA POTISKIVANJE
3B KONTEJNER ZA VINO
3C BOCA N2

1 HEATING UNITS
1C OVERCOUNTER UNIT FOR HEATING
2 ACCESSORIES
2B TUBE CLIP
2C TUBE
2D REDUCER
2E DISPENSE HEAD

3 BEVERAGE CONTAINER & GAS BOTTLES
3B CONTAINER FOR WINE
3C BOTTLE N2

OPREMA reserves the right to modify at any time the technical data and specifications reported herein, as the result of technical updating and improvement.

OPREMA d.d.

Shema spajanja Vino-N2 / Connection scheme Wine-N2

Spajanje sa stezaljkama / Connection with tube clips

Nadpultni aparat za kuhano vino
2 linije - (1 Reduktor pritiska, 2 kontejnera za vino)
Overcounter unit for mulled wine
2 line - (1 Reducer, 2 Containers)

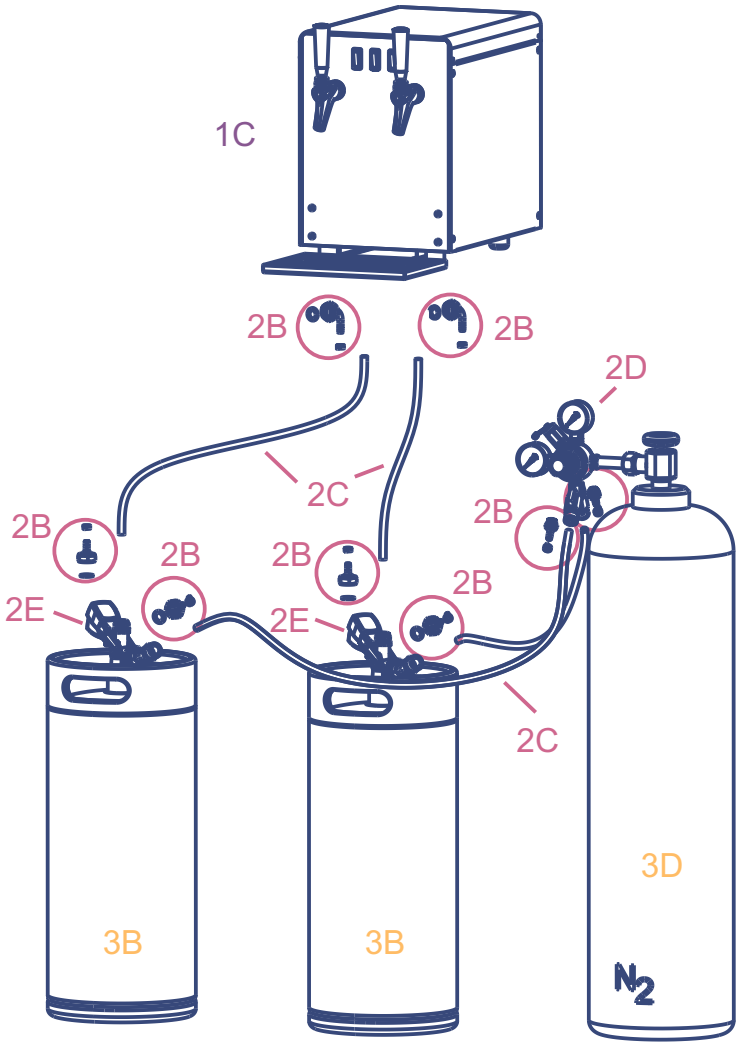

1 APARAT
1C APARAT ZA GRIJANJE I TOČENJE
2 PRIBOR
2B STEZALJKA
2C CRIJEVO
2D REDUKTOR PRITISKA
2E GLAVA ZA BAČVU

3 POSUDA ZA NAPITKE I PLIN ZA POTISKIVANJE
3B KONTEJNER ZA VINO
3C BOCA N2

1 HEATING UNITS
1C OVERCOUNTER UNIT FOR HEATING
2 ACCESSORIES
2B TUBE CLIP
2C TUBE
2D REDUCER
2E DISPENSE HEAD

3 BEVERAGE CONTAINER & GAS BOTTLES
3B CONTAINER FOR WINE
3C BOTTLE N2

OPREMA reserves the right to modify at any time the technical data and specifications reported herein, as the result of technical updating and improvement.

OPREMA d.d.

Shema spajanja Vino-N2 / Connection scheme Wine-N2

Spajanje sa JG spojnicama / Connection with JG connectors

Nadpultni aparat za hlađenje
1 linija - (1 Reduktor pritiska, 1 kontejner za vino)
Overcounter cooler
1 line - (1 Reducer, 1 Container)

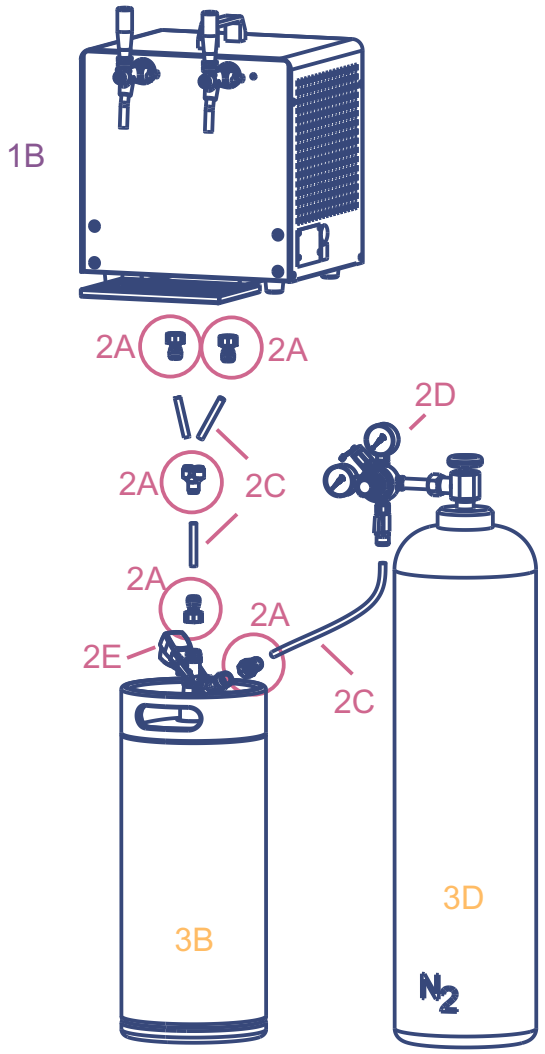

1 APARAT
1B APARAT ZA HLAĐENJE
2 PRIBOR
2A BRZA SPOJNICA
2C CRIJEVO
2D REDUKTOR PRITISKA
2E GLAVA ZA BAČVU

3 POSUDA ZA NAPITKE I PLIN ZA POTISKIVANJE
3B KONTEJNER ZA VINO
3C BOCA N2

1 COOLING UNITS
1B OVERCOUNTER UNIT
2 ACCESSORIES
2A JG CONNECTOR
2C TUBE
2D REDUCER
2E DISPENSE HEAD

3 BEVERAGE CONTAINER & GAS BOTTLES
3B CONTAINER FOR WINE
3C BOTTLE N2

OPREMA reserves the right to modify at any time the technical data and specifications reported herein, as the result of technical updating and improvement.

OPREMA d.d.

Shema spajanja Vino-N2 / Connection scheme Wine-N2

Spajanje sa JG spojnicama / Connection with JG connectors

Nadpultni aparat za hlađenje
2 linije - (1 Reduktor pritiska, 2 kontejnera za vino)
Overcounter cooler
2 lines - (1 Reducer, 2 Containers)

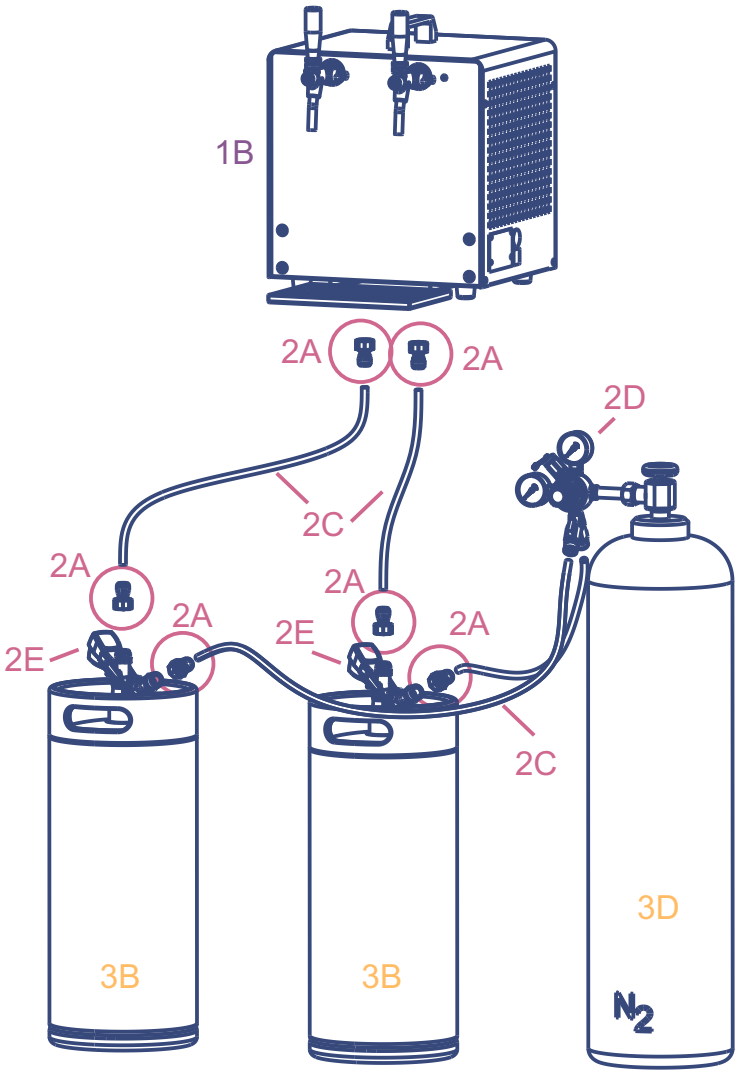

1 APARAT
1B APARAT ZA HLAĐENJE
2 PRIBOR
2A BRZA SPOJNICA
2C CRIJEVO
2D REDUKTOR PRITISKA
2E GLAVA ZA BAČVU

3 POSUDA ZA NAPITKE I PLIN ZA POTISKIVANJE
3B KONTEJNER ZA VINO
3C BOCA N2

1 COOLING UNITS
1B OVERCOUNTER UNIT
2 ACCESSORIES
2A JG CONNECTOR
2C TUBE
2D REDUCER
2E DISPENSE HEAD

3 BEVERAGE CONTAINER & GAS BOTTLES
3B CONTAINER FOR WINE
3C BOTTLE N2

OPREMA reserves the right to modify at any time the technical data and specifications reported herein, as the result of technical updating and improvement.

OPREMA d.d.

Shema spajanja Pivo-CO2 / Connection scheme Beer-CO2

Spajanje sa JG spojnicama / Connection with JG connectors

Nadpultni aparat za kuhano vino
1 linija - (1 Reduktor pritiska, 1 kontejner za vino)
Overcounter unit for mulled wine
1 line - (1 Reducer, 1 Container)

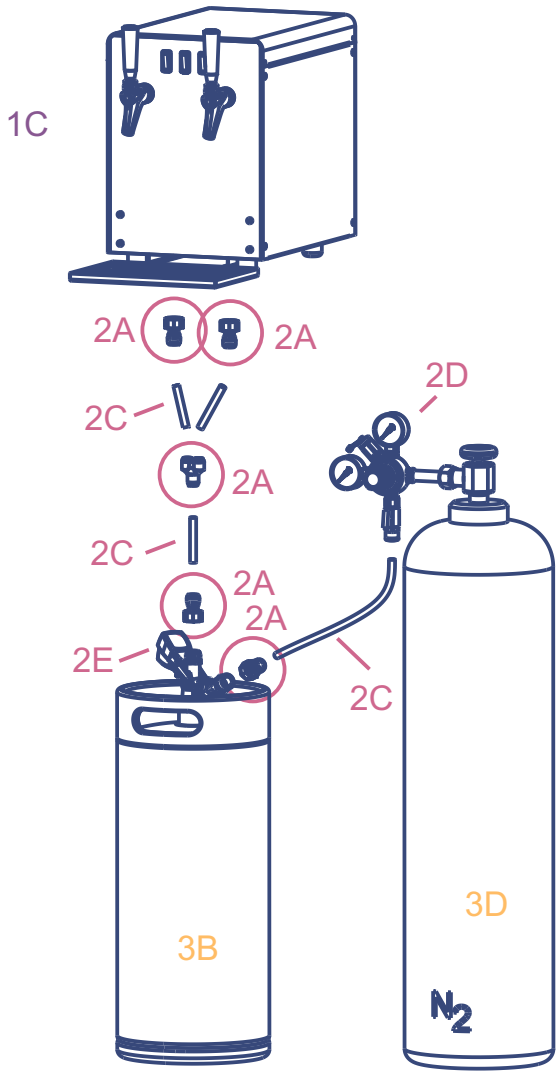

1 APARAT
1C APARAT ZA GRIJANJE I TOČENJE
2 PRIBOR
2B STEZALJKA
2C CRIJEVO
2D REDUKTOR PRITISKA
2E GLAVA ZA BAČVU

3 POSUDA ZA NAPITKE I PLIN ZA POTISKIVANJE
3B KONTEJNER ZA VINO
3C BOCA N2

1 HEATING UNITS
1C OVERCOUNTER UNIT FOR HEATING
2 ACCESSORIES
2B TUBE CLIP
2C TUBE
2D REDUCER
2E DISPENSE HEAD

3 BEVERAGE CONTAINER & GAS BOTTLES
3B CONTAINER FOR WINE
3C BOTTLE N2

OPREMA reserves the right to modify at any time the technical data and specifications reported herein, as the result of technical updating and improvement.

OPREMA d.d.

Shema spajanja Pivo-CO2 / Connection scheme Beer-CO2

Spajanje sa JG spojnicama / Connection with JG connectors

Nadpultni aparat za kuhano vino
2 linije - (1 Reduktor pritiska, 2 kontejnera za vino)
Overcounter unit for mulled wine
2 lines - (1 Reducer, 2 Containers)

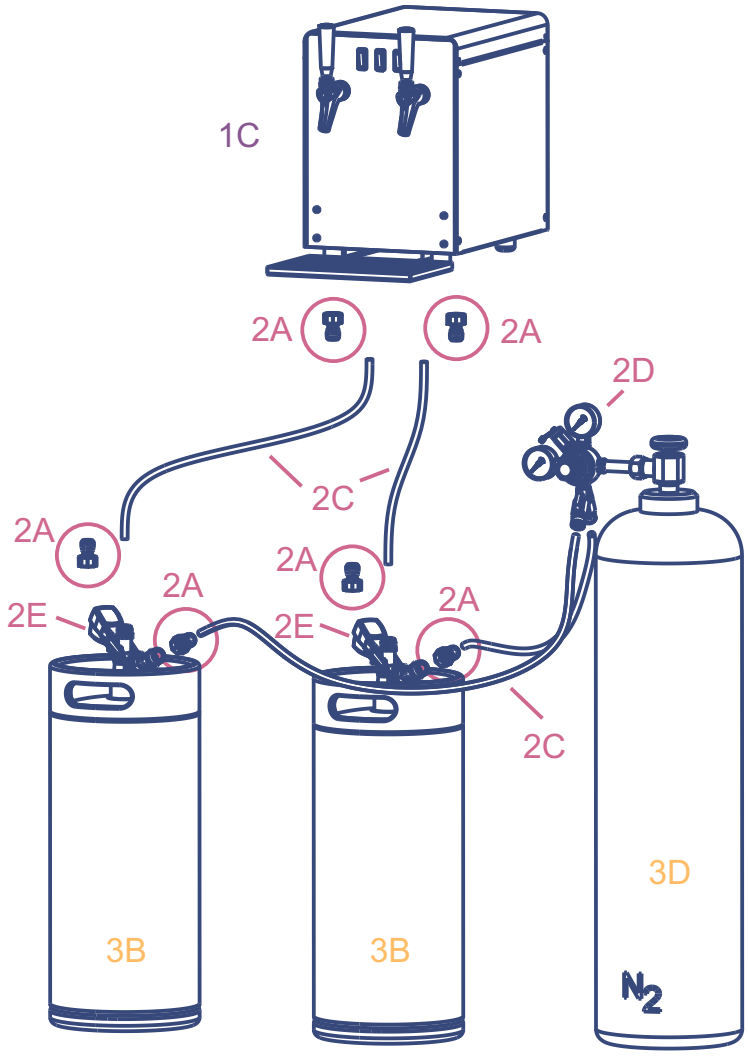

1 APARAT
1C APARAT ZA GRIJANJE I TOČENJE
2 PRIBOR
2B STEZALJKA
2C CRIJEVO
2D REDUKTOR PRITISKA
2E GLAVA ZA BAČVU

3 POSUDA ZA NAPITKE I PLIN ZA POTISKIVANJE
3B KONTEJNER ZA VINO
3C BOCA N2

1 HEATING UNITS
1C OVERCOUNTER UNIT FOR HEATING
2 ACCESSORIES
2B TUBE CLIP
2C TUBE
2D REDUCER
2E DISPENSE HEAD

3 BEVERAGE CONTAINER & GAS BOTTLES
3B CONTAINER FOR WINE
3C BOTTLE N2

OPREMA reserves the right to modify at any time the technical data and specifications reported herein, as the result of technical updating and improvement.

OPREMA d.d.

Shema spajanja Vino - sa pumpom / Connection scheme Wine with pump

Spajanje sa stezaljkama / Connection with tube clips

Nadpultni aparat za hlađenje
1 linija - (1 pumpa, 1 Bag in Box)
Overcounter cooler
1 line - (1 Pump, 1 Bag in Box)

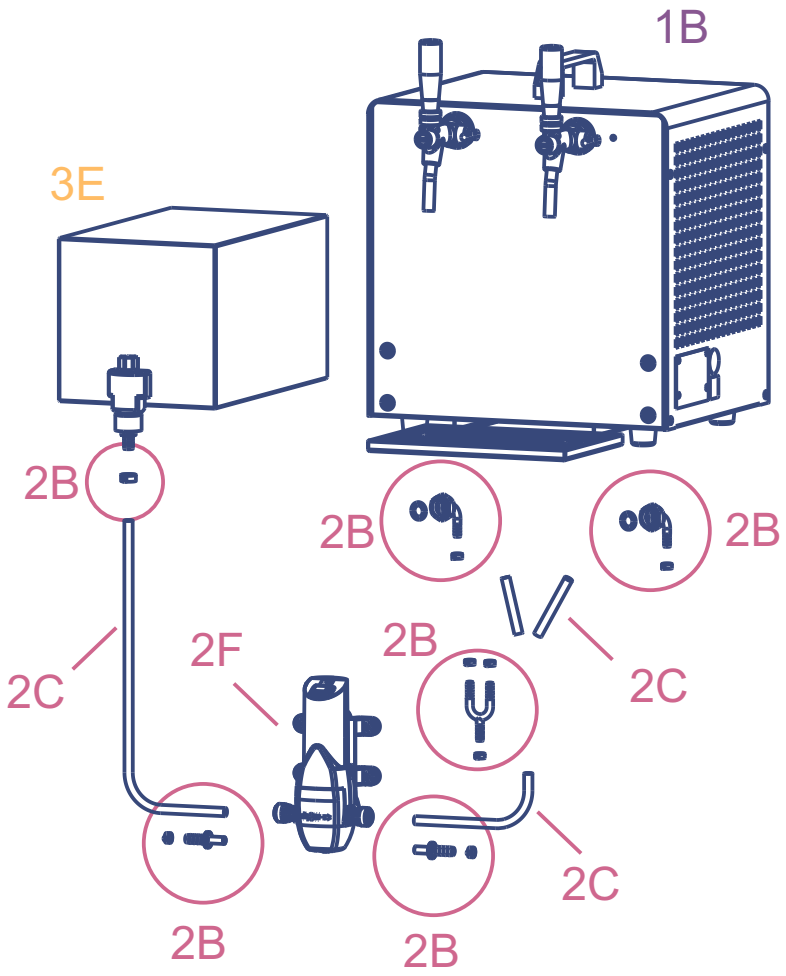

1 APARAT
1B APARAT ZA HLAĐENJE
2 PRIBOR
2B STEZALJKA
2C CRIJEVO
2F PUMPA ZA POTISKIVANJE

3 POSUDA ZA NAPITKE I PLIN ZA POTISKIVANJE
3E BAG IN BOX

1 COOLING UNITS
1B OVERCOUNTER UNIT
2 ACCESSORIES
2B TUBE CLIP
2C TUBE
2F PUMP

3 BEVERAGE CONTAINER & GAS BOTTLES
3E BAG IN BOX

OPREMA reserves the right to modify at any time the technical data and specifications reported herein, as the result of technical updating and improvement.

OPREMA d.d.

Shema spajanja Vino– sa pumpom / Connection scheme Wine-with pump

Spajanje sa stezaljkama / Connection with tube clips

Nadpultni aparat za hlađenje
2 linije - (2 pumpe, 2 Bag in Box)
Overcounter cooler
2 lines - (2 Pumps, 2 Bag in Box)

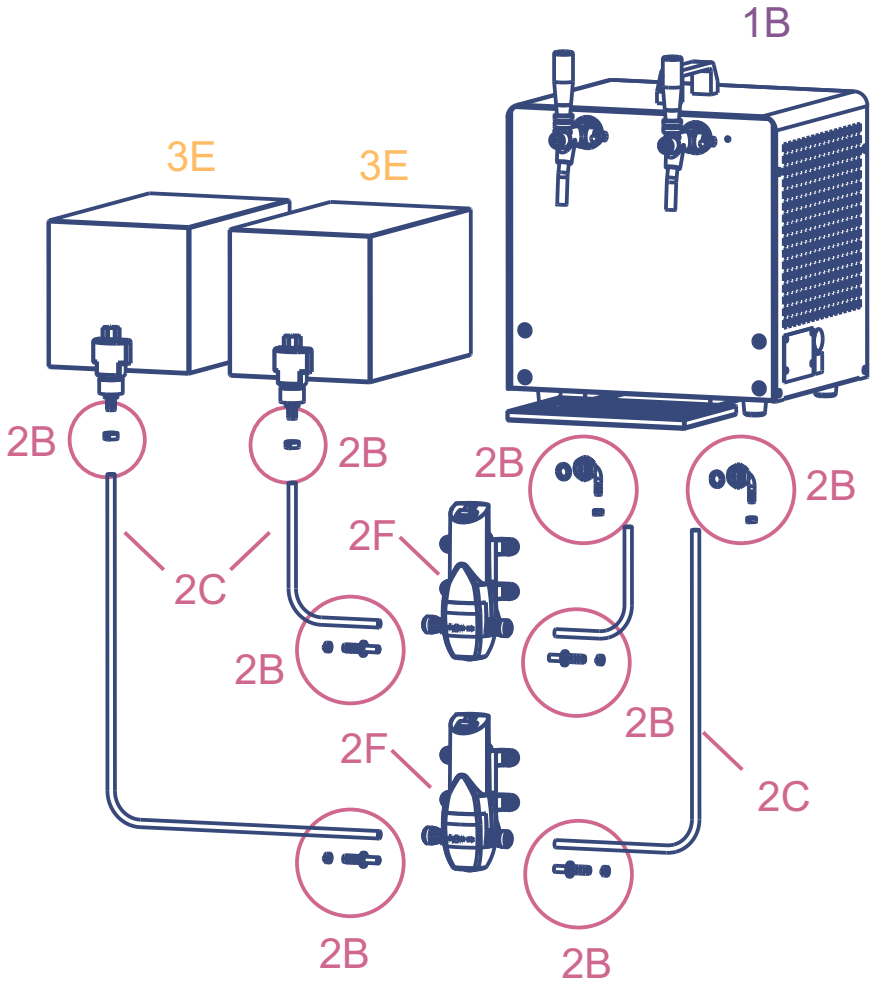

1 APARAT
1B APARAT ZA HLAĐENJE
2 PRIBOR
2B STEZALJKA
2C CRIJEVO
2F PUMPA ZA POTISKIVANJE

3 POSUDA ZA NAPITKE I PLIN ZA POTISKIVANJE
3E BAG IN BOX

1 COOLING UNITS
1B OVERCOUNTER UNIT
2 ACCESSORIES
2B TUBE CLIP
2C TUBE
2F PUMP

3 BEVERAGE CONTAINER & GAS BOTTLES
3E BAG IN BOX

OPREMA reserves the right to modify at any time the technical data and specifications reported herein, as the result of technical updating and improvement.

OPREMA d.d.

Shema spajanja Vino-sa pumpom / Connection scheme Wine-with pumps

Spajanje sa stezaljkama / Connection with tube clips

Nadpultni aparat za kuhano vino
1 linija - (1 pumpa, 1 Bag in Box)
Overcounter unit for mulled wine
1 line - (1 Pump, 1 Bag in Box)

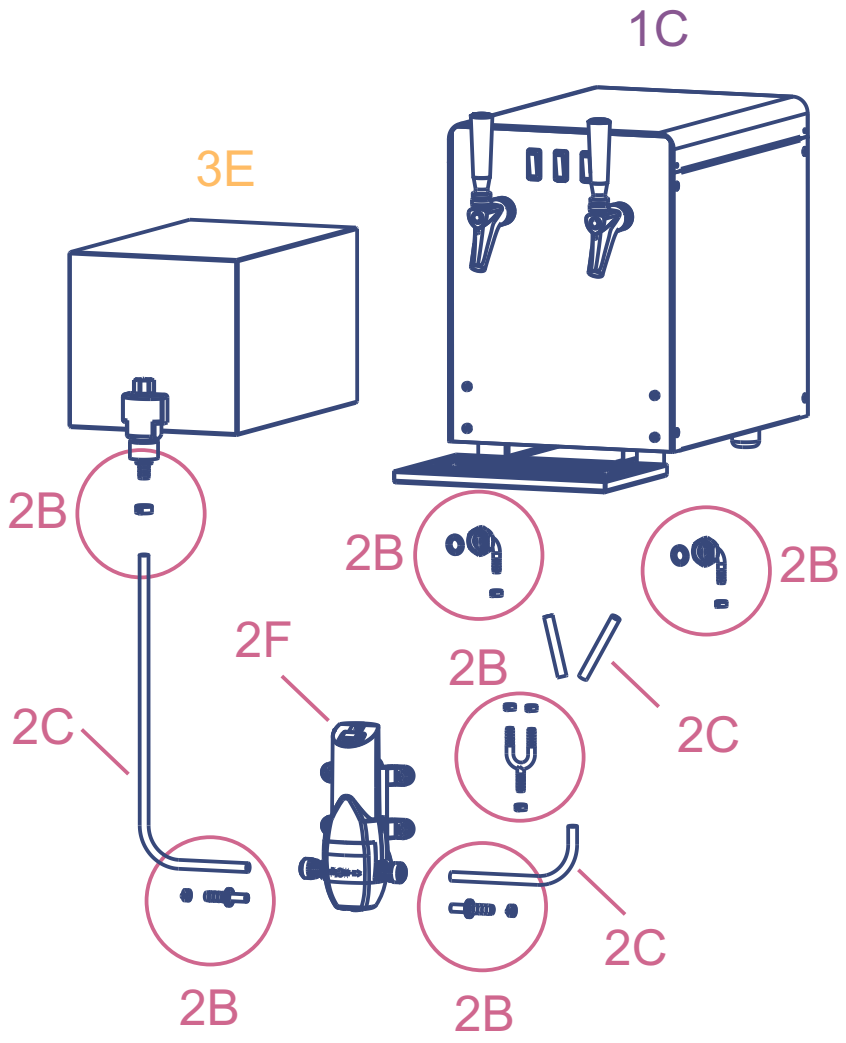

1 APARAT
1C APARAT ZA GRIJANJE I TOČENJE
2 PRIBOR
2B STEZALJKA
2C CRIJEVO
2F PUMPA ZA POTISKIVANJE

3 POSUDA ZA NAPITKE I PLIN ZA POTISKIVANJE
3E BAG IN BOX

1 HEATING UNITS
1C OVERCOUNTER UNIT FOR HEATING
2 ACCESSORIES
2B TUBE CLIP
2C TUBE
2F PUMP

3 BEVERAGE CONTAINER & GAS BOTTLES
3E BAG IN BOX

OPREMA reserves the right to modify at any time the technical data and specifications reported herein, as the result of technical updating and improvement.

OPREMA d.d.

Shema spajanja Vino-sa pumpom / Connection scheme Wine-with pumps

Spajanje sa stezaljkama / Connection with tube clips

Nadpultni aparat za kuhano vino
2 linije - (2 pumpe, 2 Bag in Box)
Overcounter unit for mulled wine
2 lines - (2 Pumps, 2 Bag in Box)

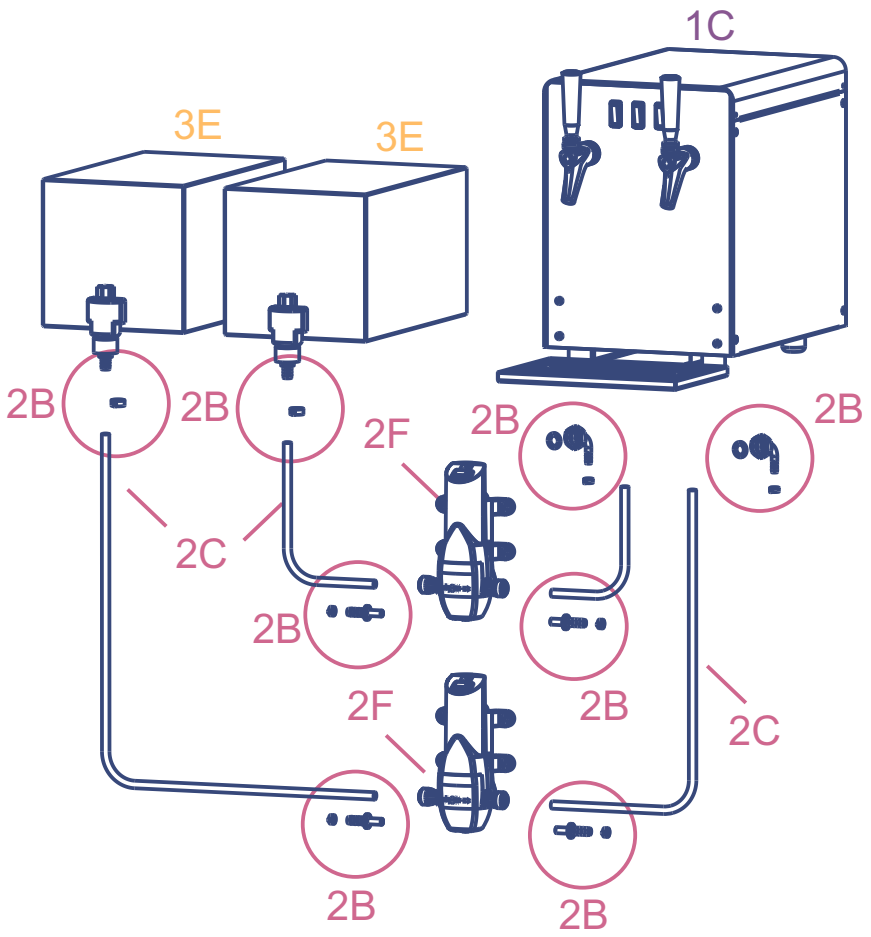

1 APARAT
1B APARAT ZA GRIJANJE I TOČENJE
2 PRIBOR
2B STEZALJKA
2C CRIJEVO
2F PUMPA ZA POTISKIVANJE

3 POSUDA ZA NAPITKE I PLIN ZA POTISKIVANJE
3E BAG IN BOX

1 HEATING UNITS
1C OVERCOUNTER UNIT FOR HEATING
2 ACCESSORIES
2B TUBE CLIP
2C TUBE
2F PUMP

3 BEVERAGE CONTAINER & GAS BOTTLES
3E BAG IN BOX

OPREMA reserves the right to modify at any time the technical data and specifications reported herein, as the result of technical updating and improvement.

OPREMA d.d.

Shema spajanja Vino - sa pumpom / Connection scheme Wine with pump

Spajanje sa JG spojnicama / Connection with JG connectors

Nadpultni aparat za hlađenje
1 linija - (1 pumpa, 1 Bag in Box)
Overcounter cooler
1 line - (1 Pump, 1 Bag in Box)

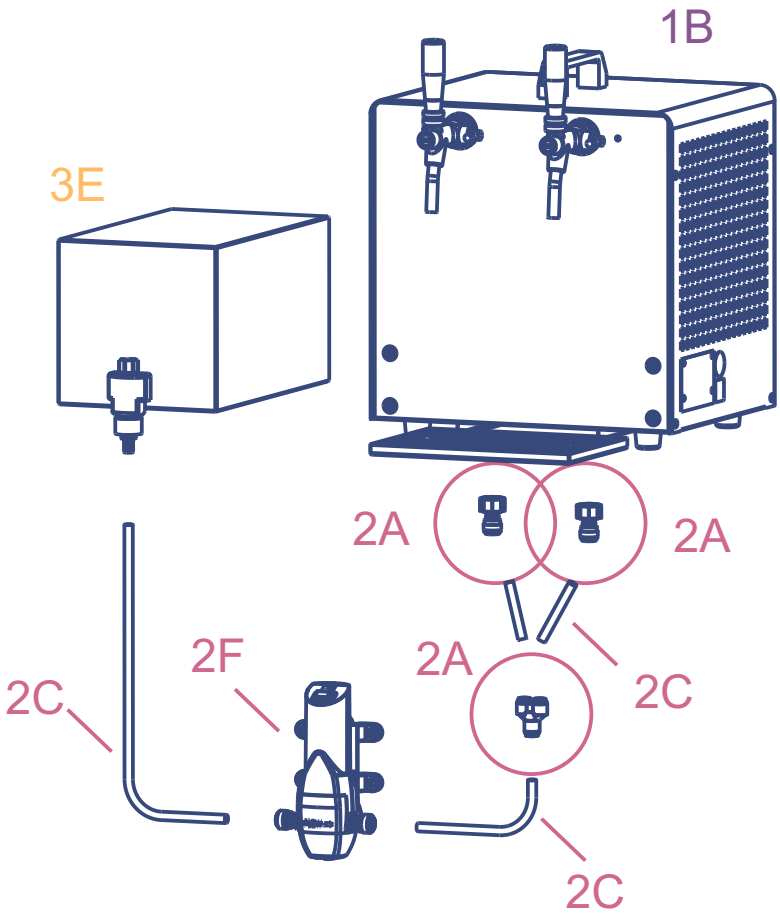

1 APARAT
1B APARAT ZA HLAĐENJE
2 PRIBOR
2A BRZA SPOJNICA
2C CRIJEVO
2F PUMPA ZA POTISKIVANJE

3 POSUDA ZA NAPITKE I PLIN ZA POTISKIVANJE
3E BAG IN BOX

1 COOLING UNITS
1B OVERCOUNTER UNIT
2 ACCESSORIES
2A JG CONNECTOR
2C TUBE
2F PUMP

3 BEVERAGE CONTAINER & GAS BOTTLES
3E BAG IN BOX

OPREMA reserves the right to modify at any time the technical data and specifications reported herein, as the result of technical updating and improvement.

OPREMA d.d.

Shema spajanja Vino– sa pumpom / Connection scheme Wine-with pump

Spajanje sa JG spojnicama / Connection with JG connectors

Nadpultni aparat za hlađenje
2 linije - (2 pumpe, 2 Bag in Box)
Overcounter cooler
2 lines - (2 Pumps, 2 Bag in Box)

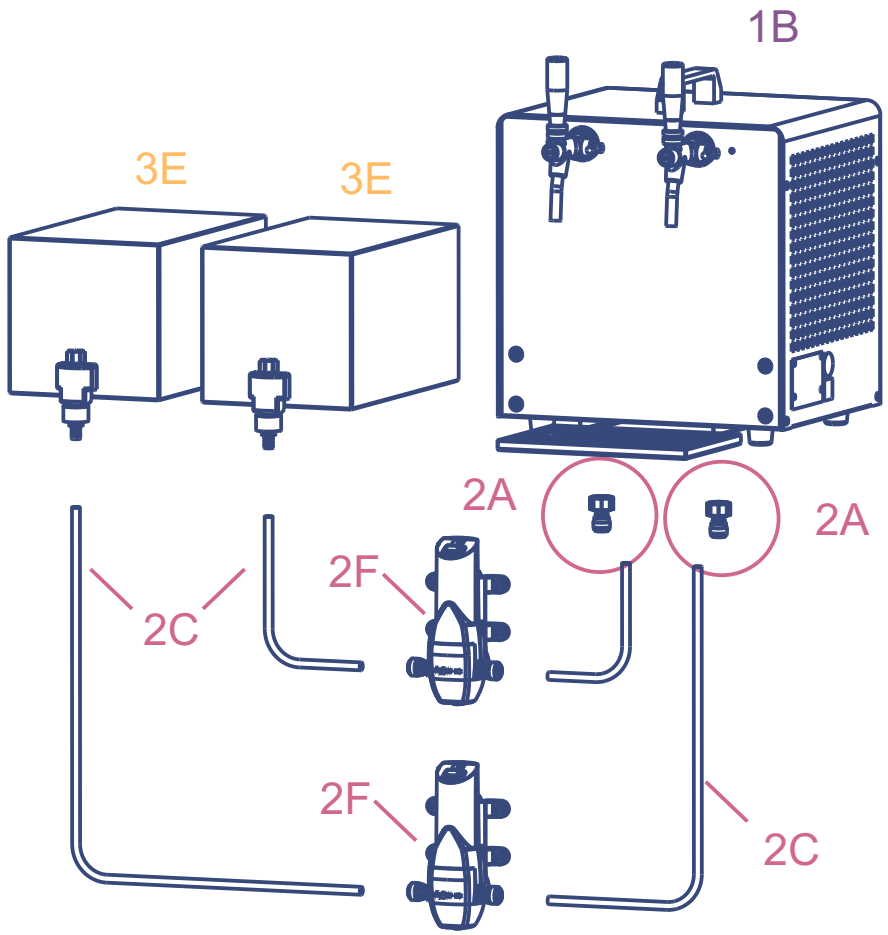

1 APARAT
1B APARAT ZA HLAĐENJE
2 PRIBOR
2A BRZA SPOJNICA
2C CRIJEVO
2F PUMPA ZA POTISKIVANJE

3 POSUDA ZA NAPITKE I PLIN ZA POTISKIVANJE
3E BAG IN BOX

1 COOLING UNITS
1B OVERCOUNTER UNIT
2 ACCESSORIES
2A JG CONNCTOR
2C TUBE
2F PUMP

3 BEVERAGE CONTAINER & GAS BOTTLES
3E BAG IN BOX

OPREMA reserves the right to modify at any time the technical data and specifications reported herein, as the result of technical updating and improvement.

OPREMA d.d.

Shema spajanja Vino-sa pumpom / Connection scheme Wine-with pumps

Spajanje sa JG spojnicama / Connection with JG connectors

Nadpultni aparat za kuhano vino
1 linija - (1 pumpa, 1 Bag in Box)
Overcounter unit for mulled wine
1 line - (1 Pump, 1 Bag in Box)

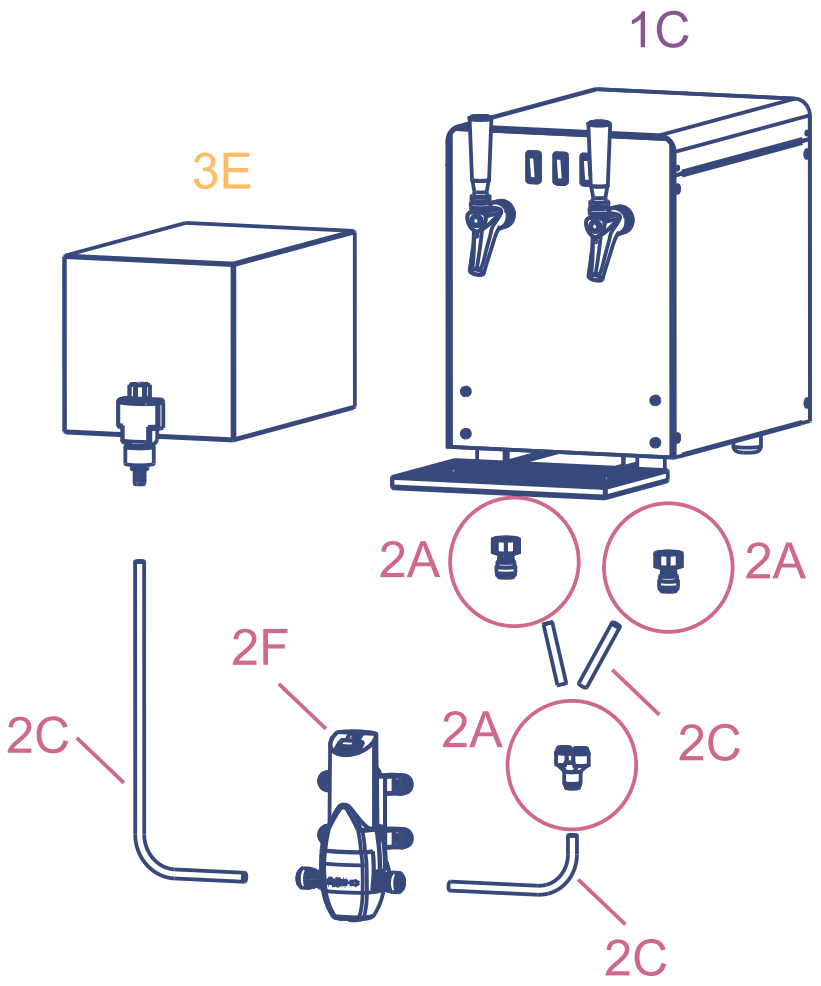

1 APARAT
1C APARAT ZA GRIJANJE I TOČENJE
2 PRIBOR
2A BRZA SPOJNICA
2C CRIJEVO
2F PUMPA ZA POTISKIVANJE

3 POSUDA ZA NAPITKE I PLIN ZA POTISKIVANJE
3E BAG IN BOX

1 HEATING UNITS
1C OVERCOUNTER UNIT FOR HEATING
2 ACCESSORIES
2A JG CONNECTOR
2C TUBE
2F PUMP

3 BEVERAGE CONTAINER & GAS BOTTLES
3E BAG IN BOX

OPREMA reserves the right to modify at any time the technical data and specifications reported herein, as the result of technical updating and improvement.

OPREMA d.d.

Shema spajanja Vino-sa pumpom / Connection scheme Wine-with pumps

Spajanje sa JG spojnicama / Connection with JG connectors

Nadpultni aparat za kuhano vino
2 linije - (2 pumpe, 2 Bag in Box)
Overcounter unit for mulled wine
2 lines - (2 Pumps, 2 Bag in Box)

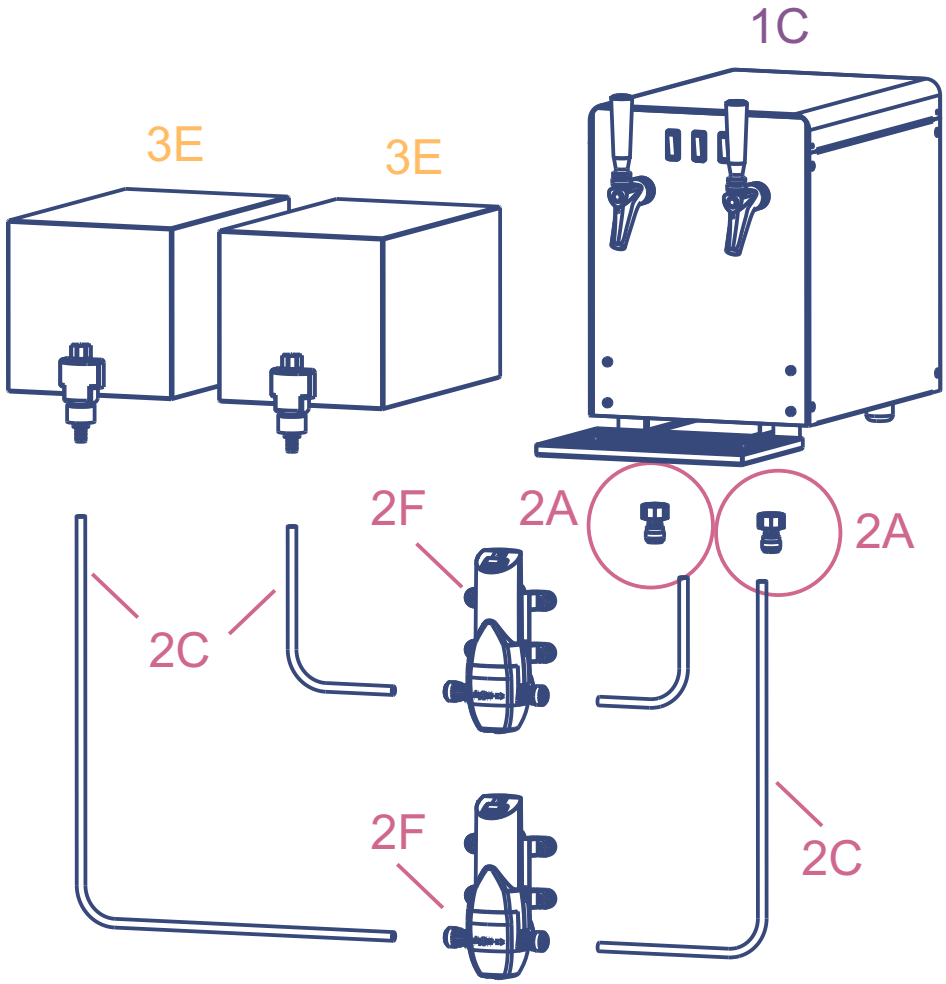

1 APARAT
1B APARAT ZA GRIJANJE I TOČENJE
2 PRIBOR
2A BRZA SPOJNICA
2C CRIJEVO
2F PUMPA ZA POTISKIVANJE

3 POSUDA ZA NAPITKE I PLIN ZA POTISKIVANJE
3E BAG IN BOX

1 HEATING UNITS
1B OVERCOUNTER UNIT FOR HEATING
2 ACCESSORIES
2A JG CONNECTOR
2C TUBE
2F PUMP

3 BEVERAGE CONTAINER & GAS BOTTLES
3E BAG IN BOX

OPREMA reserves the right to modify at any time the technical data and specifications reported herein, as the result of technical updating and improvement.

OPREMA d.d.

Subject: _____

By: _____

Date: _____

Note: _____

Copyright © 2018.
Oprema d.d.

Subject: _____

By: _____

Date: _____

Note: _____

Copyright © 2018.
Oprema d.d.